THE DESIGN AND INFORMATION HELD ON THESE DRAWINGS ARE THE PROPERTY OF CONTROL TECHNIQUES plc.
THEY MUST NOT BE COPIED IN ANYWAY, NOR USED BY OR COMMUNICATED TO THIRD PARTIES, WITHOUT OUR WRITTEN CONSENT.

RD1 - CONTROL

70020323.SCH

RD40 - SIZE 4 POWER

70020339.SCH

BOARD			SCHEMATIC		
PANEL	RD1 - CONTROL	RD40 - POWER	PANEL	RD1 - CONTROL	RD40 - POWER
ISS.00.00	07.00	01.00	ISS.00.00	07.00	01.00
ISS.01.00	08.00	02.00	ISS.01.00	08.00	02.00
ISS.01.00	08.00	02.00	ISS.01.01	08.00	02.02
ISS.01.00	08.00	02.00	ISS.01.02	08.00	02.03
ISS.02.00	09.00	04.01	ISS.02.00	09.01	04.03
ISS.02.00	09.00	04.01	ISS.02.01	09.02	04.04
ISS.03.00	09.00	05.00	ISS.03.00	09.05	05.01
ISS.03.00	09.00	05.00	ISS.03.01	09.06	05.02
ISS.04.00	09.00	06.00	ISS.04.00	09.06	06.00
ISS.04.00	09.00	06.00	ISS.04.01	09.06	06.01
ISS.04.00	09.00	06.00	ISS.04.02	09.06	06.03
ISS.05.00	11.00	07.00	ISS.05.00	11.01	07.00
ISS.05.01	11.01	07.00	ISS.05.01	11.01	07.00
ISS.06.00	13.00	07.00	ISS.06.00	13.00	07.01

Planes teaked on the gerbers
no change to the schematic

PANEL1
RDFOB4 ISS.06.00

ISSUE	DATE	INITIALS	ISSUE	DATE	INITIALS
05.00	04/10/01	G.J.H.			
04.02	12/06/01	G.J.H.			
04.01	23/08/00	G.J.H.	06.00	12/08/02	G.J.H.
04.00	08/08/00	G.J.H.	05.01	12/02/02	T.J.J.

DRAWN G.J.H.

DATE

APPROVED

SCALE N/A

A DIVISION OF EMERSON ELECTRIC Co.

CONTROL TECHNIQUES

CONTROL TECHNIQUES THE GRO NEWTOWN POWYS UK SY16 3BE

SUBCONTRACTOR

THIS DRAWING IS UNCONTROLLED

TITLE RDFOB4 - COMMANDER SE SIZE 4 FAMILY OF BOARDS

PART NO. 3130-0684

SUPERCEDES

DRG.NO. 7032-0004

SHT 1 OF 1

ISSUE 06.00

A3

THE DESIGN AND INFORMATION HELD ON THESE DRAWINGS ARE THE PROPERTY OF CONTROL TECHNIQUES plc.
THEY MUST NOT BE COPIED IN ANYWAY, NOR USED BY OR COMMUNICATED TO THIRD PARTIES, WITHOUT OUR WRITTEN CONSENT.

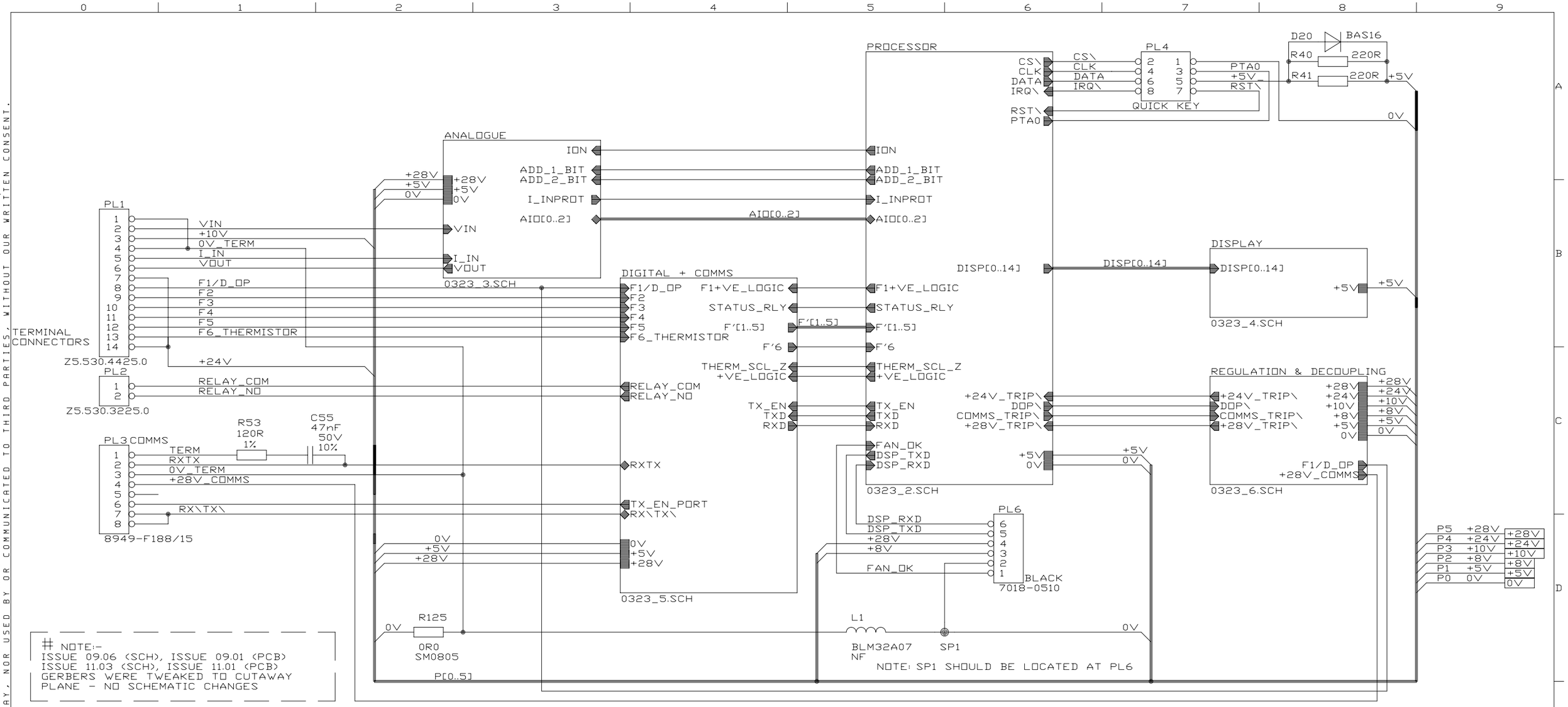

NOTE:-
ISSUE 09.06 (SCH), ISSUE 09.01 (PCB)
ISSUE 11.03 (SCH), ISSUE 11.01 (PCB)
GERBERS WERE TWEAKED TO CUTAWAY
PLANE - NO SCHEMATIC CHANGES

SCHEMATIC	BOARD
A	A
01.00	01.00
02.00	02.00
03.00	03.00
04.00	04.00
05.00	05.00
06.00	06.00
06.10	06.00
07.00	07.00
07.10	07.00
07.01	07.00
07.11	07.00

SCHEMATIC	BOARD
08.00	08.00
08.10	08.00
09.00	09.00
09.01	09.00
09.02	09.00
09.03	09.00
09.04	09.00
09.05	09.00
09.06	09.01 #
10.00	10.00
11.00	11.00
11.01	11.00

SCHEMATIC	BOARD
11.02	11.00
11.03	11.01 #
11.04	11.01
12.00	12.00
13.00	13.00

ISSUE	DATE	INITIALS	ISSUE	DATE	INITIALS
12.00	17/01/02	G.J.H.			
11.04	03/04/02	G.J.H.			
11.03	25/01/02	G.J.H.			
11.02	22/10/01	G.J.H.	13.00	17/04/02	G.J.H.

DRAWN T.J.J.
DATE
APPROVED
SCALE N/A

A DIVISION OF EMERSON ELECTRIC Co.
CONTROL TECHNIQUES
CONTROL TECHNIQUES THE GRO NEWTOWN POWYS UK SY16 3BE

SUBCONTRACTOR
THIS DRAWING IS UNCONTROLLED

TITLE
RD1 - CONTROL

PART NO.
SUPERCEDES
DRG.NO. 7002-0323
SHT 1 OF 6
ISSUE 13.00
A3

THE DESIGN AND INFORMATION HELD ON THESE DRAWINGS ARE THE PROPERTY OF CONTROL TECHNIQUES plc.
THEY MUST NOT BE COPIED IN ANYWAY, NOR USED BY OR COMMUNICATED TO THIRD PARTIES, WITHOUT OUR WRITTEN CONSENT.

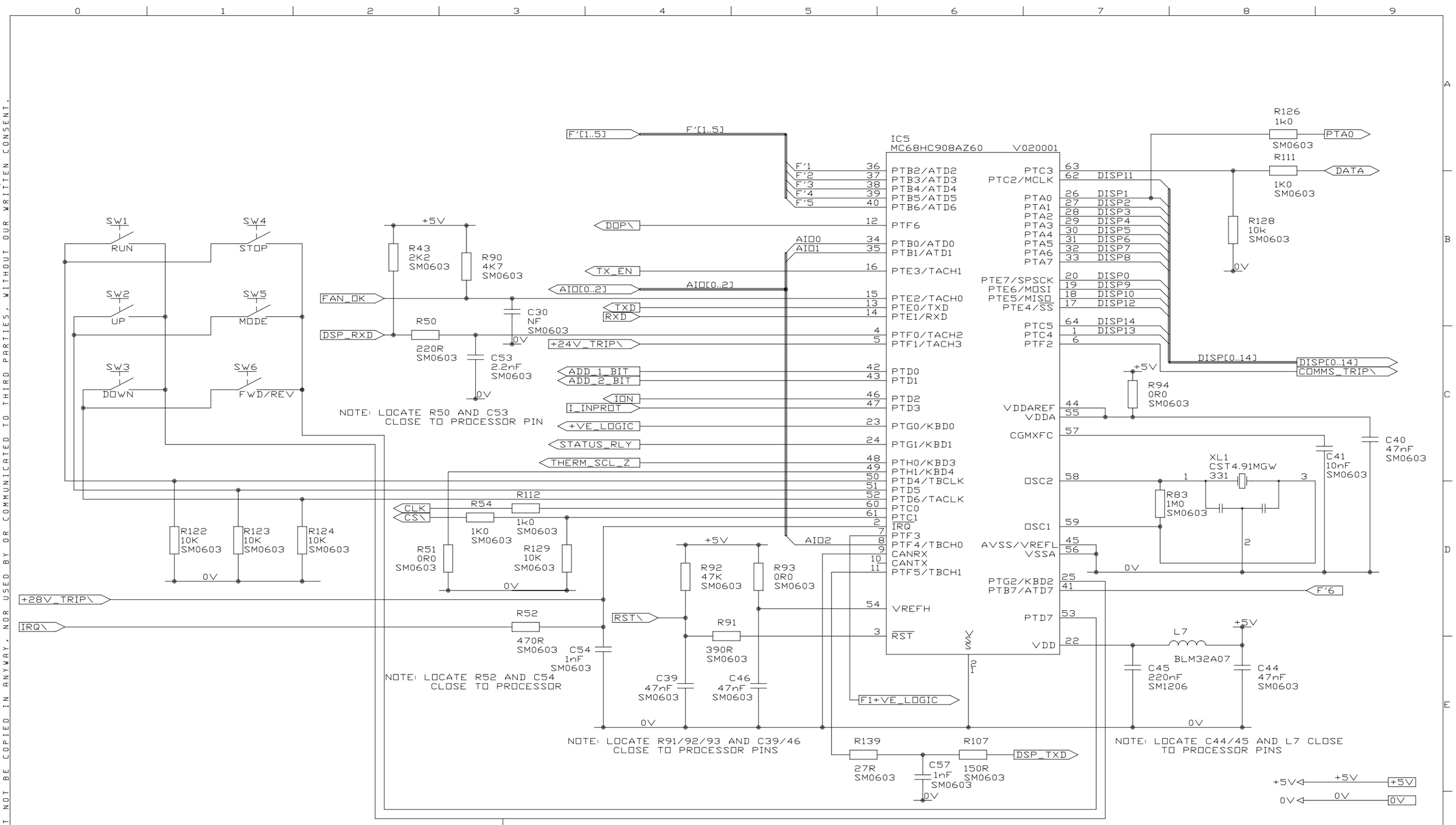

12.00	17/01/02	G.J.H.			
11.04	03/04/02	G.J.H.			
11.03	25/01/02	G.J.H.			
11.02	22/10/01	G.J.H.	13.00	17/04/02	G.J.H.
ISSUE	DATE	INITIALS	ISSUE	DATE	INITIALS

DRAWN T.J.J.
DATE
APPROVED
SCALE N/A

A DIVISION OF EMERSON ELECTRIC Co.
CONTROL TECHNIQUES
CONTROL TECHNIQUES THE GRO NEWTOWN POWYS UK SY16 3BE

SUBCONTRACTOR
THIS DRAWING IS UNCONTROLLED

TITLE
RD1 - CONTROL PROCESSOR

PART NO.
SUPERCEDES
DRG.NO. 7002-0323
SHT 2 OF 6
ISSUE 13.00
A3

THE DESIGN AND INFORMATION HELD ON THESE DRAWINGS ARE THE PROPERTY OF CONTROL TECHNIQUES plc.
THEY MUST NOT BE COPIED IN ANYWAY, NOR USED BY OR COMMUNICATED TO THIRD PARTIES, WITHOUT OUR WRITTEN CONSENT.

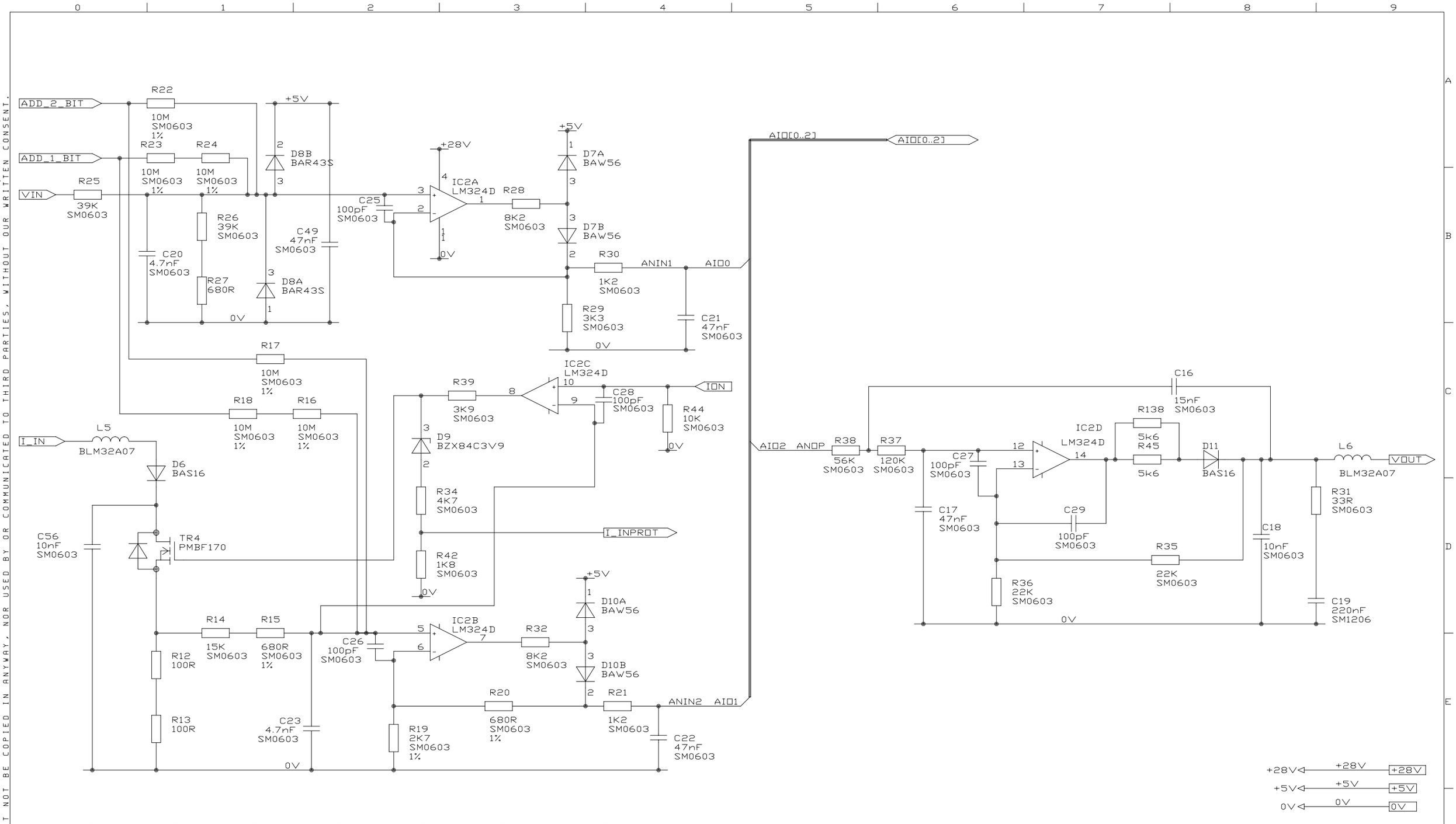

ISSUE	DATE	INITIALS	ISSUE	DATE	INITIALS
12.00	17/01/02	G.J.H.			
11.04	03/04/02	G.J.H.			
11.03	25/01/02	G.J.H.			
11.02	22/10/01	G.J.H.	13.00	17/04/02	G.J.H.

DRAWN: T.J.J.
DATE:
APPROVED:
SCALE: N/A

A DIVISION OF EMERSON ELECTRIC Co.
CONTROL TECHNIQUES
CONTROL TECHNIQUES THE GRO NEWTOWN POWYS UK SY16 3BE

SUBCONTRACTOR: THIS DRAWING IS UNCONTROLLED

TITLE: RD1 - CONTROL ANALOGUE

PART NO.:
SUPERCEDES:
DRG.NO.: 7002-0323
SHT: 3 OF 6
ISSUE: 13.00
A3

THE DESIGN AND INFORMATION HELD ON THESE DRAWINGS ARE THE PROPERTY OF CONTROL TECHNIQUES plc.
THEY MUST NOT BE COPIED IN ANYWAY, NOR USED BY OR COMMUNICATED TO THIRD PARTIES, WITHOUT OUR WRITTEN CONSENT.

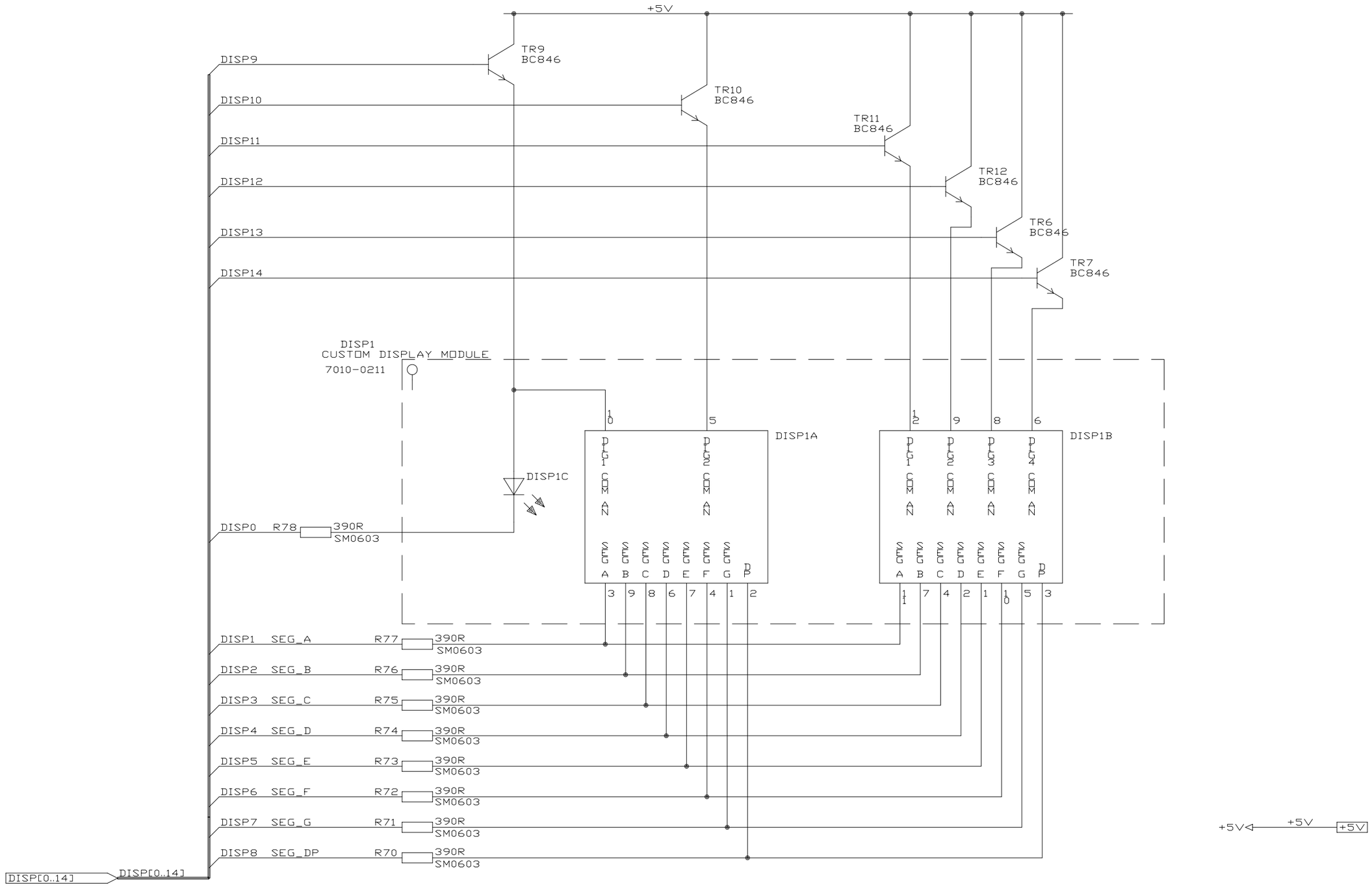

ISSUE	DATE	INITIALS	ISSUE	DATE	INITIALS
12.00	17/01/02	G.J.H.			
11.04	03/04/02	G.J.H.			
11.03	25/01/02	G.J.H.			
11.02	22/10/01	G.J.H.	13.00	17/04/02	G.J.H.

DRAWN T.J.J.
DATE
APPROVED
SCALE N/A

A DIVISION OF EMERSON ELECTRIC Co.
CONTROL TECHNIQUES
CONTROL TECHNIQUES THE GRO NEWTOWN POWYS UK SY16 3BE

SUBCONTRACTOR
THIS DRAWING IS UNCONTROLLED

TITLE
RD1 - CONTROL DISPLAY

PART NO.
SUPERCEDES
DRG.NO. 7002-0323
SHT 4 OF 6
ISSUE 13.00
A3

THE DESIGN AND INFORMATION HELD ON THESE DRAWINGS ARE THE PROPERTY OF CONTROL TECHNIQUES plc.
THEY MUST NOT BE COPIED IN ANYWAY, NOR USED BY OR COMMUNICATED TO THIRD PARTIES, WITHOUT OUR WRITTEN CONSENT.

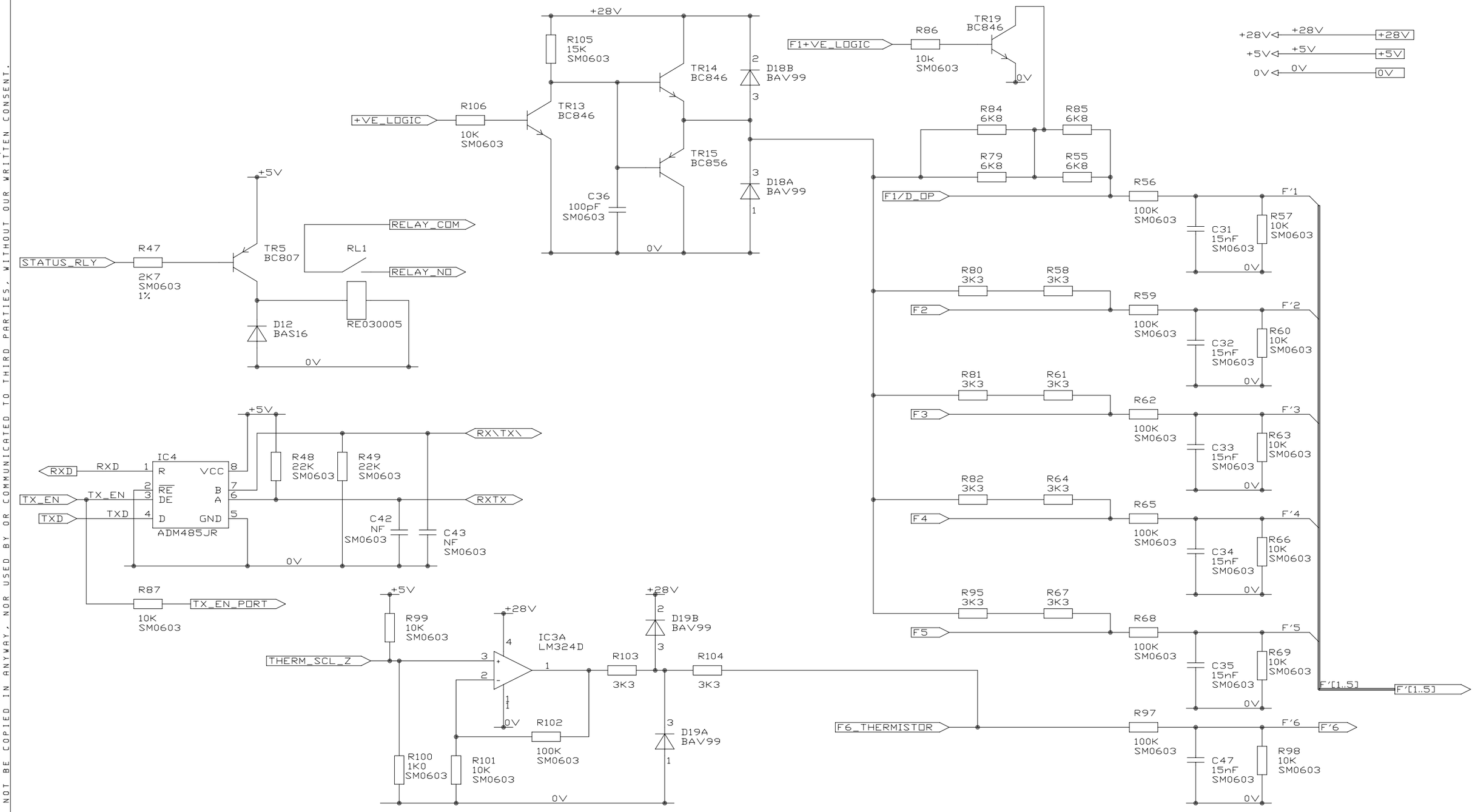

12.00	17/01/02	G.J.H.				DRAWN T.J.J.	CONTROL TECHNIQUES	A DIVISION OF EMERSON ELECTRIC Co.	TITLE RD1 - CONTROL DIGITAL & COMMS		
11.04	03/04/02	G.J.H.				DATE					
11.03	25/01/02	G.J.H.				APPROVED	CONTROL TECHNIQUES THE GRO NEWTOWN POWYS UK SY16 3BE		PART NO.	SUPERCEDES	
11.02	22/10/01	G.J.H.	13.00	17/04/02	G.J.H.						
ISSUE	DATE	INITIALS	ISSUE	DATE	INITIALS	SCALE N/A	SUBCONTRACTOR THIS DRAWING IS UNCONTROLLED		DRG.NO. 7002-0323	SHT 5 OF 6	ISSUE 13.00

A3

THE DESIGN AND INFORMATION HELD ON THESE DRAWINGS ARE THE PROPERTY OF CONTROL TECHNIQUES plc.
THEY MUST NOT BE COPIED IN ANYWAY, NOR USED BY OR COMMUNICATED TO THIRD PARTIES, WITHOUT OUR WRITTEN CONSENT.

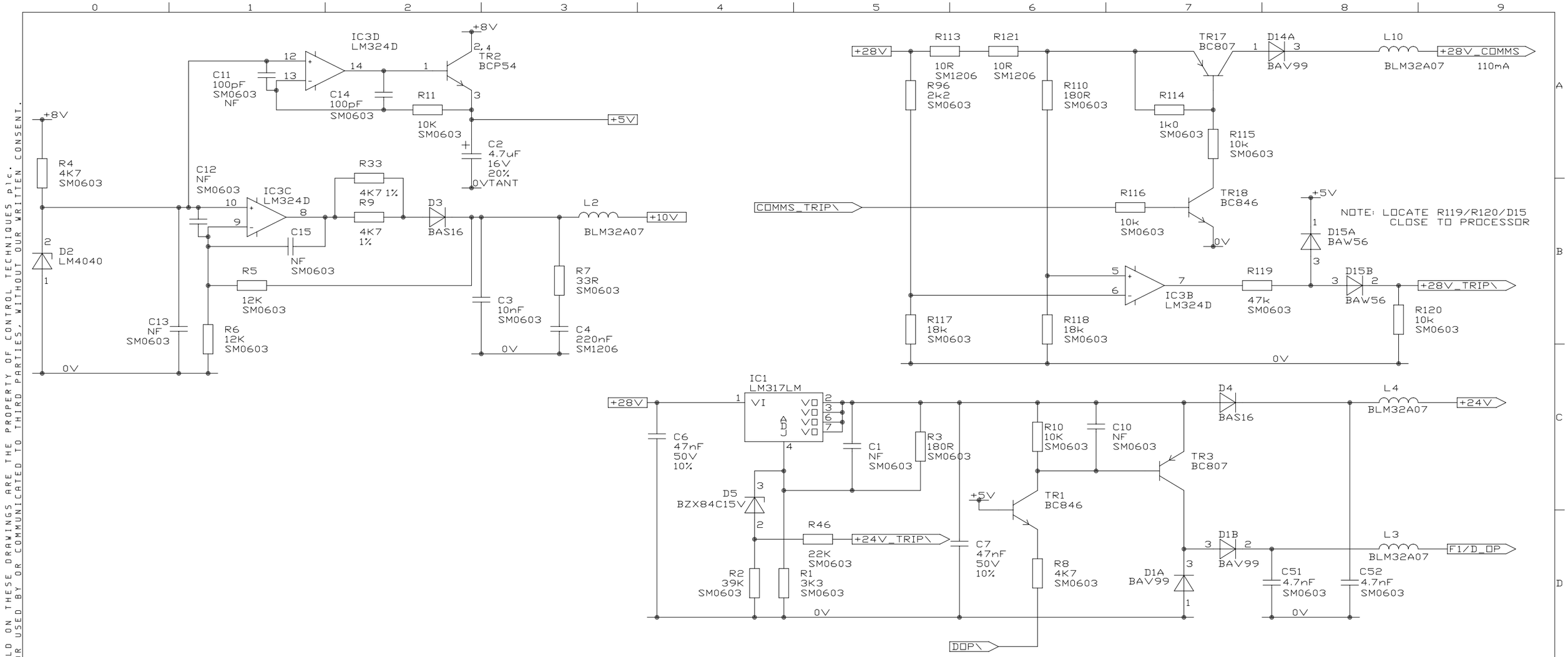

DECOUPLING

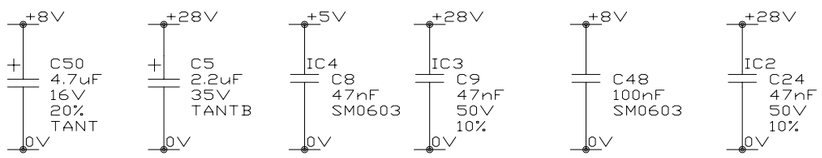

PCB1
RD1 ISS.13.00

POWER

IC	SHEET	+5V	0V	+28V	NOTES:
1	6			1	
2	3		11	4	PLEASE SEE SHEET
3	5		11	4	
4	5	8	5		
5	2		21		PLEASE SEE SHEET FOR VVDA(55) & VSSA(56)

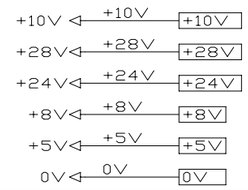

ISSUE	DATE	INITIALS	ISSUE	DATE	INITIALS
12.00	17/01/02	G.J.H.			
11.04	03/04/02	G.J.H.			
11.03	25/01/02	G.J.H.			
11.02	22/10/01	G.J.H.	13.00	17/04/02	G.J.H.

DRAWN: T.J.J.
DATE:
APPROVED:
SCALE: N/A

A DIVISION OF EMERSON ELECTRIC Co.
CONTROL TECHNIQUES
CONTROL TECHNIQUES THE GRO NEWTOWN POWYS UK SY16 3BE

SUBCONTRACTOR
THIS DRAWING IS UNCONTROLLED

TITLE
RD1 - CONTROL
REGULATION & DECOUPLING

PART NO.
SUPERCEDES
DRG.NO. 7002-0323
SHT 6 OF 6
ISSUE 13.00
A3

THE DESIGN AND INFORMATION HELD ON THESE DRAWINGS ARE THE PROPERTY OF CONTROL TECHNIQUES Plc.
THEY MUST NOT BE COPIED IN ANYWAY, NOR USED BY OR COMMUNICATED TO THIRD PARTIES, WITHOUT OUR WRITTEN CONSENT.

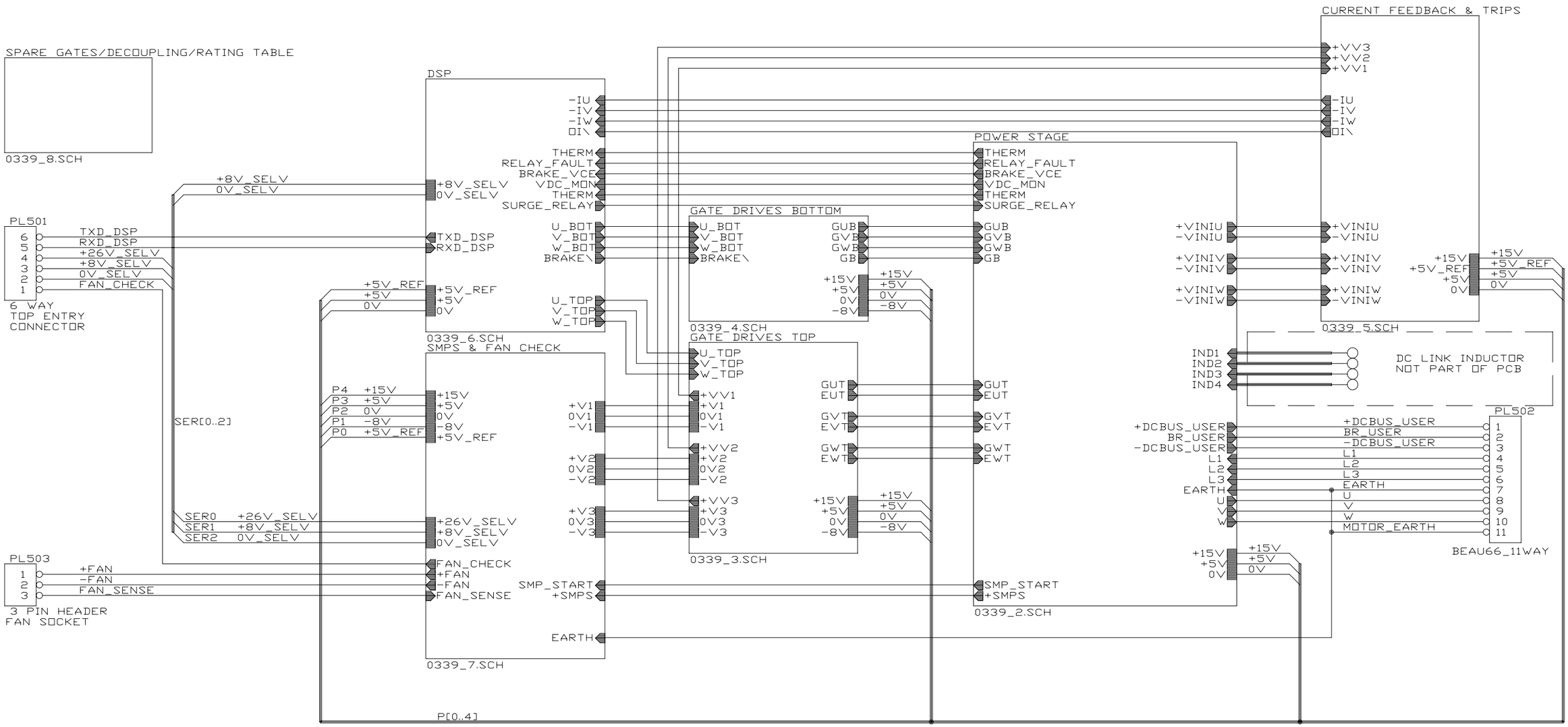

CIRCUIT	BOARD	CIRCUIT	BOARD	CIRCUIT	BOARD	CIRCUIT	BOARD	CIRCUIT	BOARD
ISSUE 00.00	ISSUE 00.00	ISSUE 02.03	ISSUE 02.00	ISSUE 04.02	ISSUE 04.00	ISSUE 05.02	ISSUE 05.00	ISSUE 06.04	ISSUE 06.00
ISSUE 01.00	ISSUE 01.00	ISSUE 03.00	ISSUE 03.00	ISSUE 04.03	ISSUE 04.01	ISSUE 06.00	ISSUE 06.00	ISSUE 07.00	ISSUE 07.00
ISSUE 02.00	ISSUE 02.00	ISSUE 03.01	ISSUE 03.00	ISSUE 04.04	ISSUE 04.01	ISSUE 06.01	ISSUE 06.00	ISSUE 07.01	ISSUE 07.00
ISSUE 02.01	ISSUE 02.00	ISSUE 04.00	ISSUE 04.00	ISSUE 05.00	ISSUE 05.00	ISSUE 06.02	ISSUE 06.00		
ISSUE 02.02	ISSUE 02.00	ISSUE 04.01	ISSUE 04.00	ISSUE 05.01	ISSUE 05.00	ISSUE 06.03	ISSUE 06.00		

PCB
RD40 ISS.07.00

ISSUE	DATE	INITIALS	ISSUE	DATE	INITIALS
06.03	12/06/01	G.J.H.			
06.02	18/09/00	G.J.H.	07.01	12/08/02	G.J.H.
06.01	23/08/00	G.J.H.	07.00	04/10/01	G.J.H.
06.00	08/08/00	G.J.H.	06.04	21/08/01	G.J.H.

DRAWN G.J.H.
DATE
APPROVED
SCALE

A DIVISION OF EMERSON ELECTRIC Co.
CONTROL TECHNIQUES
CONTROL TECHNIQUES THE GRO NEWTOWN POWYS UK SY16 3BE

SUBCONTRACTOR
THIS DRAWING IS UNCONTROLLED

TITLE
RD40 – COMMANDER SE
SIZE 4 POWER BOARD

PART NO.
SUPERCEDES
DRG.NO. 7002-0339
SHT 1 OF 8
ISSUE 07.01
A3

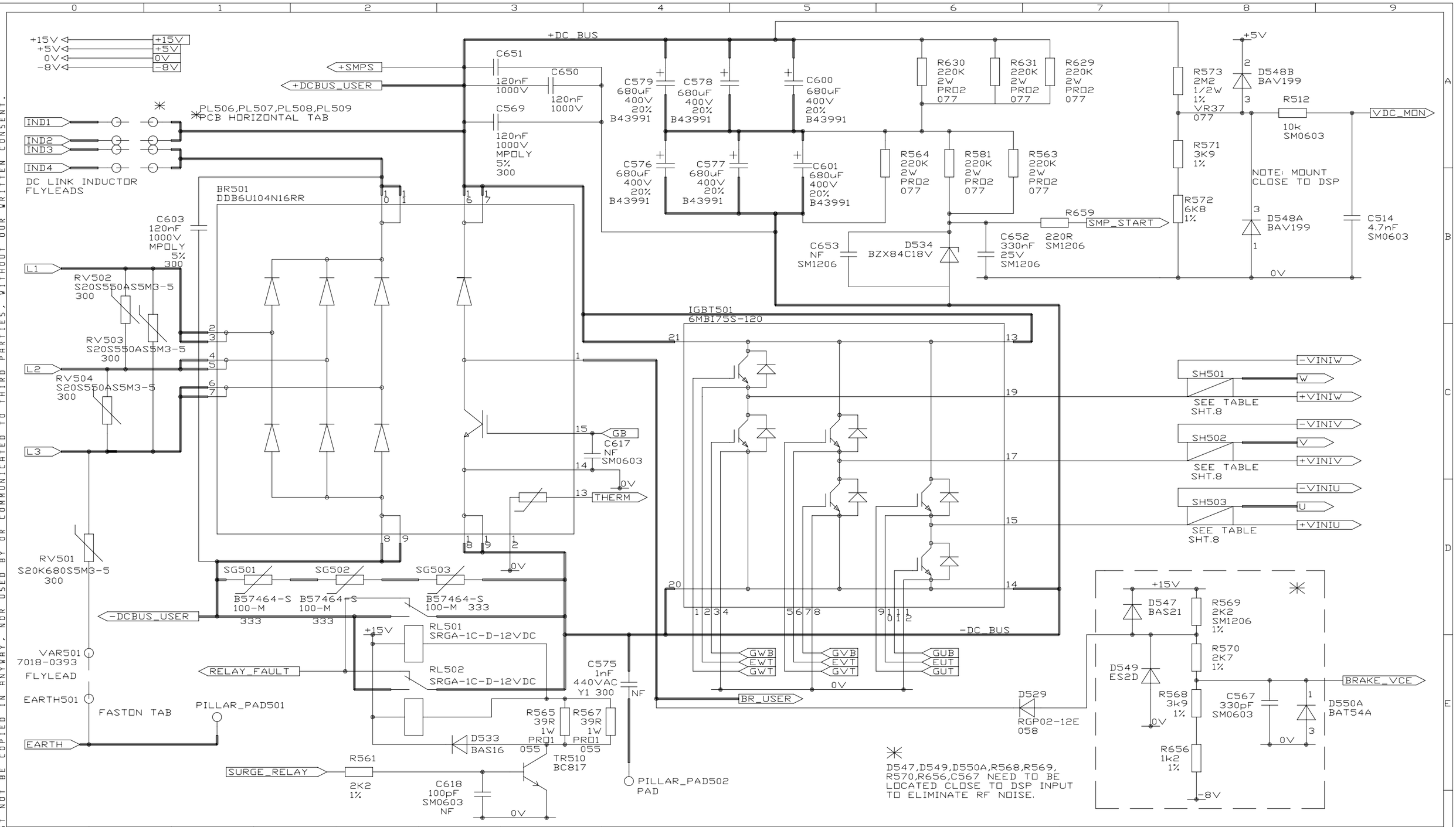

ISSUE	DATE	INITIALS	ISSUE	DATE	INITIALS
06.03	12/06/01	G.J.H.			
06.02	18/09/00	G.J.H.	07.01	12/08/02	G.J.H.
06.01	23/08/00	G.J.H.	07.00	04/10/01	G.J.H.
06.00	08/08/00	G.J.H.	06.04	21/08/01	G.J.H.

DRAWN G.J.H.
DATE
APPROVED
SCALE

A DIVISION OF EMERSON ELECTRIC Co.

CONTROL TECHNIQUES

CONTROL TECHNIQUES THE GRO NEWTOWN POWYS UK SY16 3BE

SUBCONTRACTOR

THIS DRAWING IS UNCONTROLLED

TITLE

RD40 - COMMANDER SE
SIZE 4 POWER BOARD
POWER STAGE

PART NO.

SUPERCEDES

DRG.NO. 7002-0339

SHT 2 OF 8

ISSUE 07.01

A3

THE DESIGN AND INFORMATION HELD ON THESE DRAWINGS ARE THE PROPERTY OF CONTROL TECHNIQUES Plc.
THEY MUST NOT BE COPIED IN ANYWAY, NOR USED BY OR COMMUNICATED TO THIRD PARTIES, WITHOUT OUR WRITTEN CONSENT.

THE DESIGN AND INFORMATION HELD ON THESE DRAWINGS ARE THE PROPERTY OF CONTROL TECHNIQUES plc.
THEY MUST NOT BE COPIED IN ANYWAY, NOR USED BY OR COMMUNICATED TO THIRD PARTIES, WITHOUT OUR WRITTEN CONSENT.

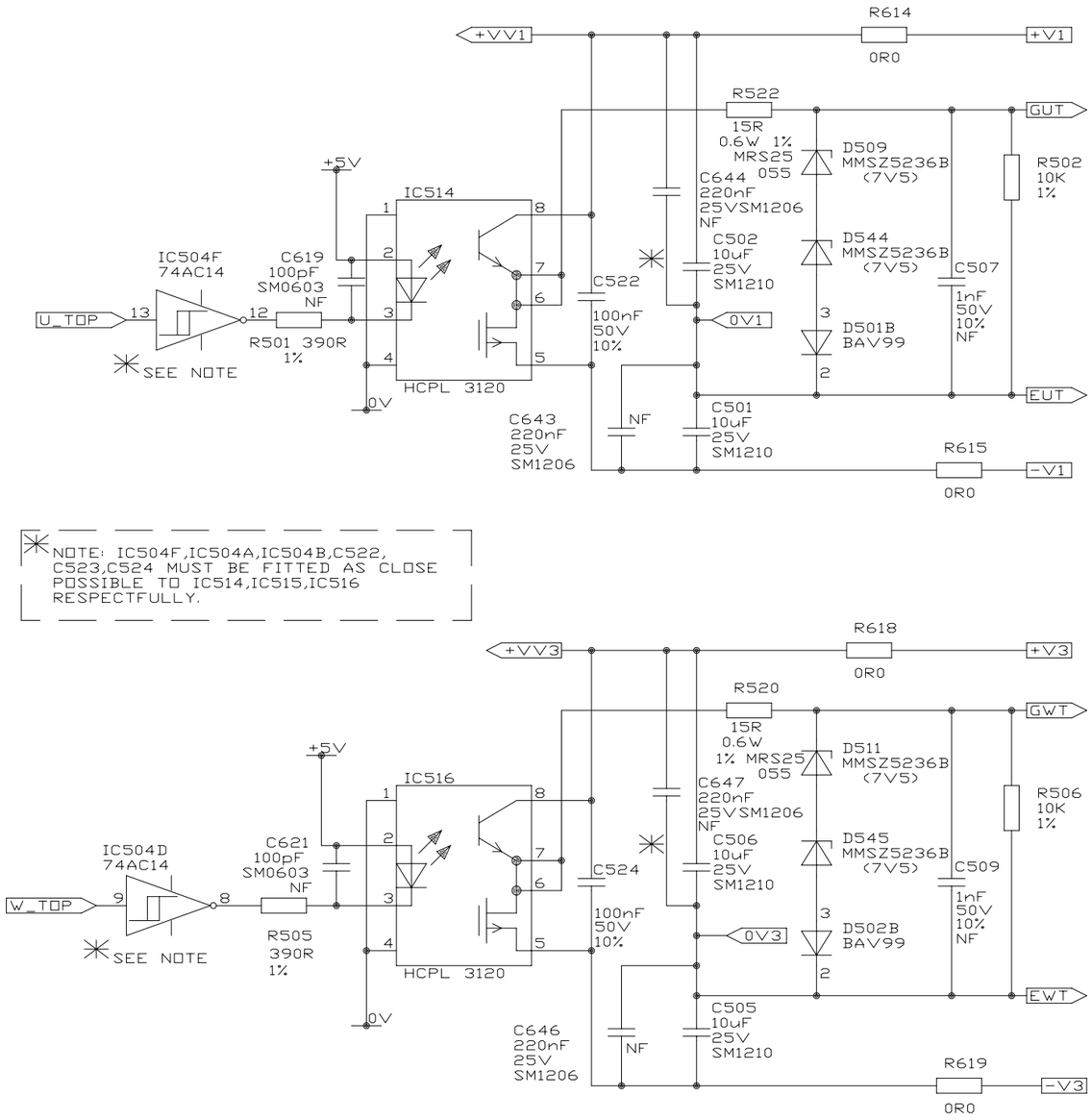

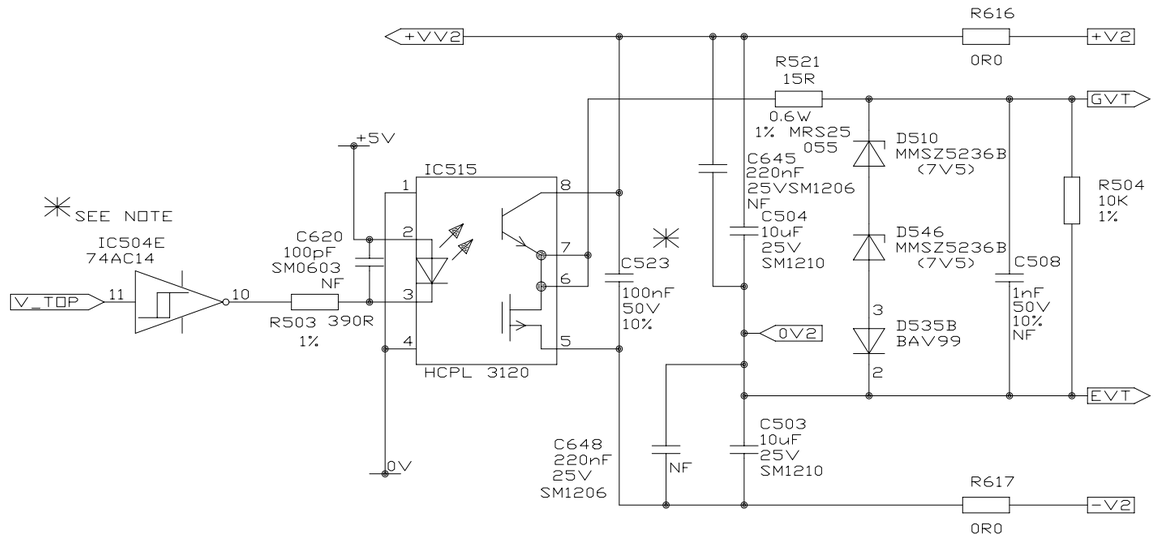

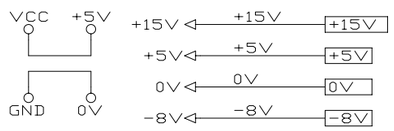

ISSUE	DATE	INITIALS	ISSUE	DATE	INITIALS
06.03	12/06/01	G.J.H.			
06.02	18/09/00	G.J.H.	07.01	12/08/02	G.J.H.
06.01	23/08/00	G.J.H.	07.00	04/10/01	G.J.H.
06.00	08/08/00	G.J.H.	06.04	21/08/01	G.J.H.

DRAWN: G.J.H.
DATE
APPROVED
SCALE

A DIVISION OF EMERSON ELECTRIC Co.
CONTROL TECHNIQUES
CONTROL TECHNIQUES THE GRO NEWTOWN POWYS UK SY16 3BE

SUBCONTRACTOR
THIS DRAWING IS UNCONTROLLED

TITLE
RD40 - COMMANDER SE
SIZE 4 POWER BOARD
GATE DRIVES - TOP

PART NO.
SUPERCEDES
DRG.NO. 7002-0339
SHT 3 OF 8
ISSUE 07.01
A3

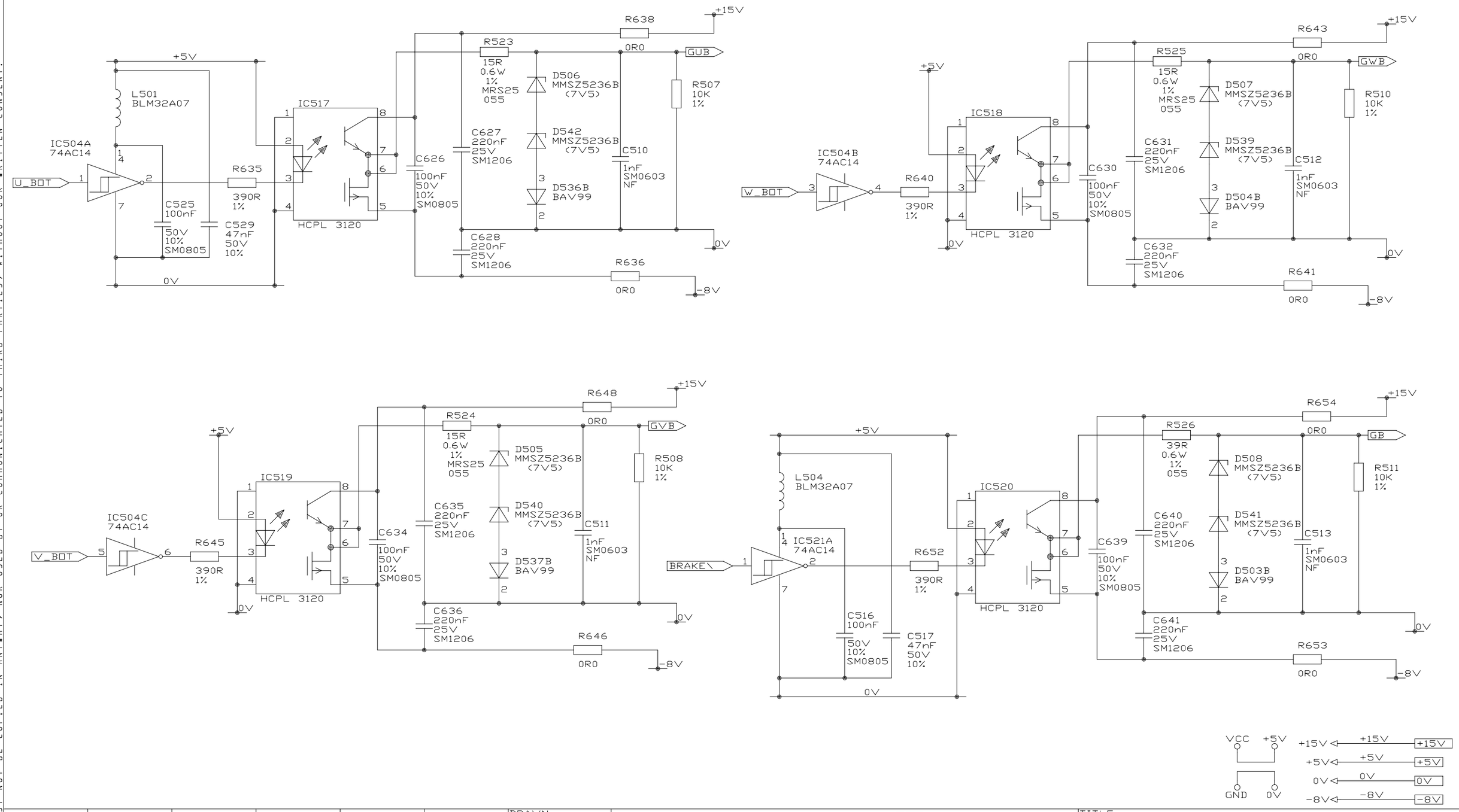

ISSUE	DATE	INITIALS	ISSUE	DATE	INITIALS
06.03	12/06/01	G.J.H.			
06.02	18/09/00	G.J.H.	07.01	12/08/02	G.J.H.
06.01	23/08/00	G.J.H.	07.00	04/10/01	G.J.H.
06.00	08/08/00	G.J.H.	06.04	21/08/01	G.J.H.

DRAWN G.J.H.

DATE

APPROVED

SCALE

A DIVISION OF EMERSON ELECTRIC Co.

CONTROL TECHNIQUES

CONTROL TECHNIQUES THE GRO NEWTOWN POWYS UK SY16 3BE

SUBCONTRACTOR

THIS DRAWING IS UNCONTROLLED

TITLE

RD40 - COMMANDER SE
SIZE 4 POWER BOARD
GATE DRIVES - BOTTOM

PART NO.

SUPERCEDES

DRG.NO. 7002-0339

SHT 4 OF 8

ISSUE 07.01

A3

THE DESIGN AND INFORMATION HELD ON THESE DRAWINGS ARE THE PROPERTY OF CONTROL TECHNIQUES Plc.
THEY MUST NOT BE COPIED IN ANYWAY, NOR USED BY OR COMMUNICATED TO THIRD PARTIES, WITHOUT OUR WRITTEN CONSENT.

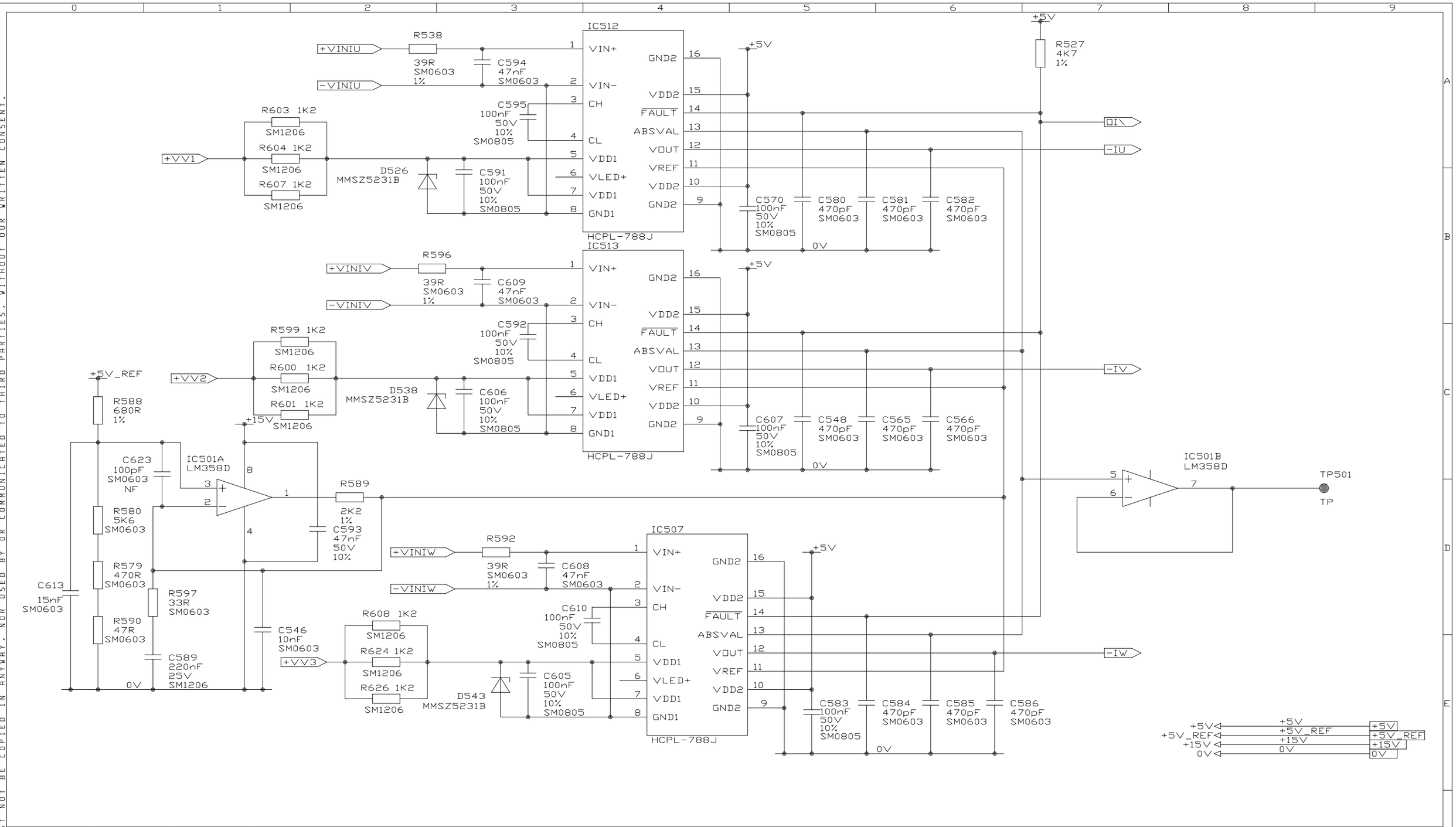

THE DESIGN AND INFORMATION HELD ON THESE DRAWINGS ARE THE PROPERTY OF CONTROL TECHNIQUES plc. THEY MUST NOT BE COPIED IN ANYWAY, NOR USED BY OR COMMUNICATED TO THIRD PARTIES, WITHOUT OUR WRITTEN CONSENT.

ISSUE	DATE	INITIALS	ISSUE	DATE	INITIALS
06.03	12/06/01	G.J.H.			
06.02	18/09/00	G.J.H.	07.01	12/08/02	G.J.H.
06.01	23/08/00	G.J.H.	07.00	04/10/01	G.J.H.
06.00	08/08/00	G.J.H.	06.04	21/08/01	G.J.H.

DRAWN G.J.H.
DATE
APPROVED
SCALE

A DIVISION OF EMERSON ELECTRIC Co.
CONTROL TECHNIQUES
CONTROL TECHNIQUES THE GRO NEWTOWN POWYS UK SY16 3BE

SUBCONTRACTOR
THIS DRAWING IS UNCONTROLLED

TITLE
RD40 – COMMANDER SE
SIZE 4 POWER BOARD
CURRENT FEEDBACK & TRIPS

PART NO.
SUPERCEDES
DRG.NO. 7002-0339
SHT 5 of 8
ISSUE 07.01
A3

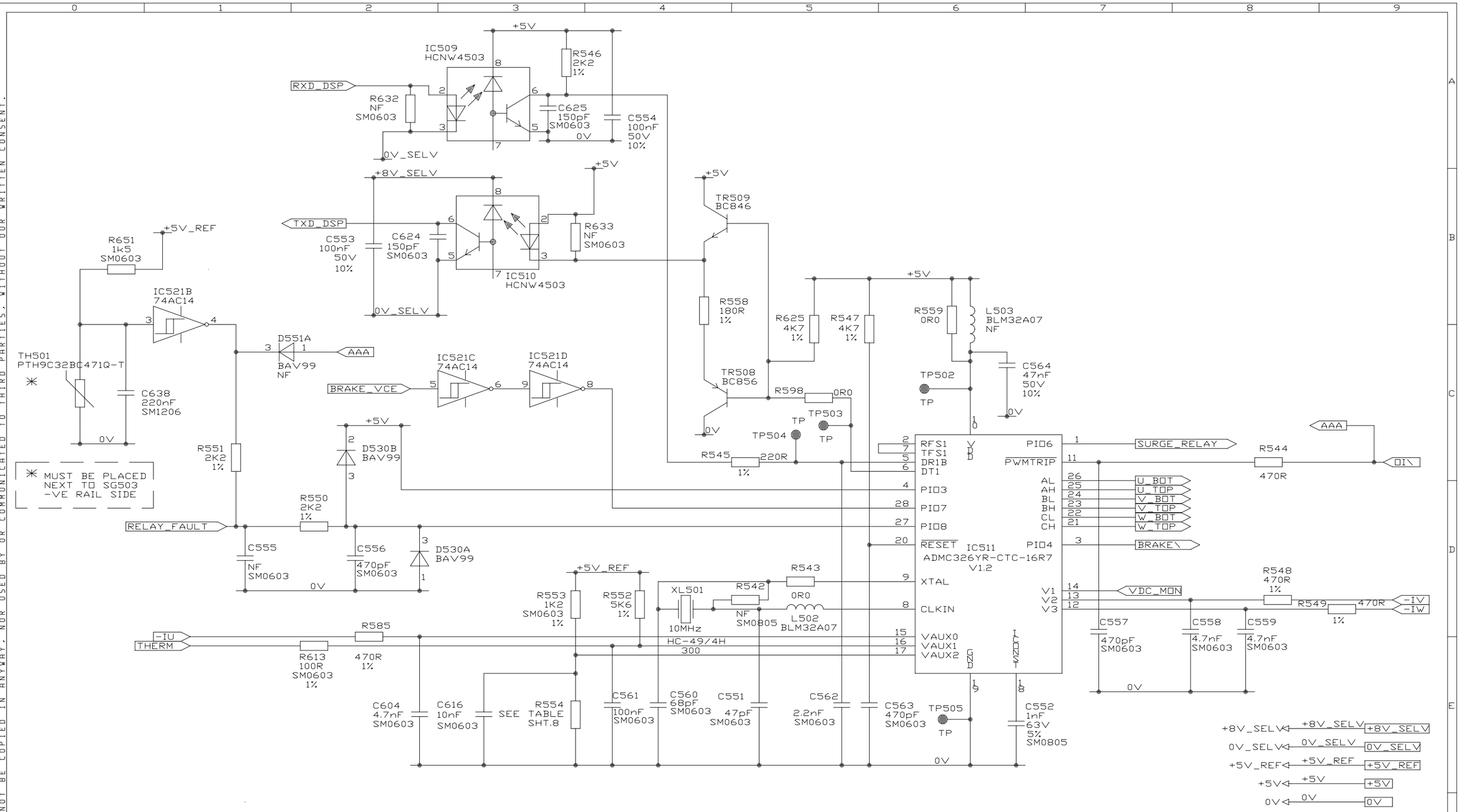

THE DESIGN AND INFORMATION HELD ON THESE DRAWINGS ARE THE PROPERTY OF CONTROL TECHNIQUES plc.
THEY MUST NOT BE COPIED IN ANYWAY, NOR USED BY OR COMMUNICATED TO THIRD PARTIES, WITHOUT OUR WRITTEN CONSENT.

ISSUE	DATE	INITIALS	ISSUE	DATE	INITIALS
06.03	12/06/01	G.J.H.			
06.02	18/09/00	G.J.H.	07.01	12/08/02	G.J.H.
06.01	23/08/00	G.J.H.	07.00	04/10/01	G.J.H.
06.00	08/08/00	G.J.H.	06.04	21/08/01	G.J.H.

DRAWN G.J.H.
DATE
APPROVED
SCALE

A DIVISION OF EMERSON ELECTRIC Co.
CONTROL TECHNIQUES
CONTROL TECHNIQUES THE GRO NEWTOWN POWYS UK SY16 3BE

SUBCONTRACTOR
THIS DRAWING IS UNCONTROLLED

TITLE
RD40 - COMMANDER SE
SIZE 4 POWER CARD
DSP

PART NO.
SUPERCEDES
DRG.NO. 7002-0339
SHT 6 OF 8
ISSUE 07.01
A3

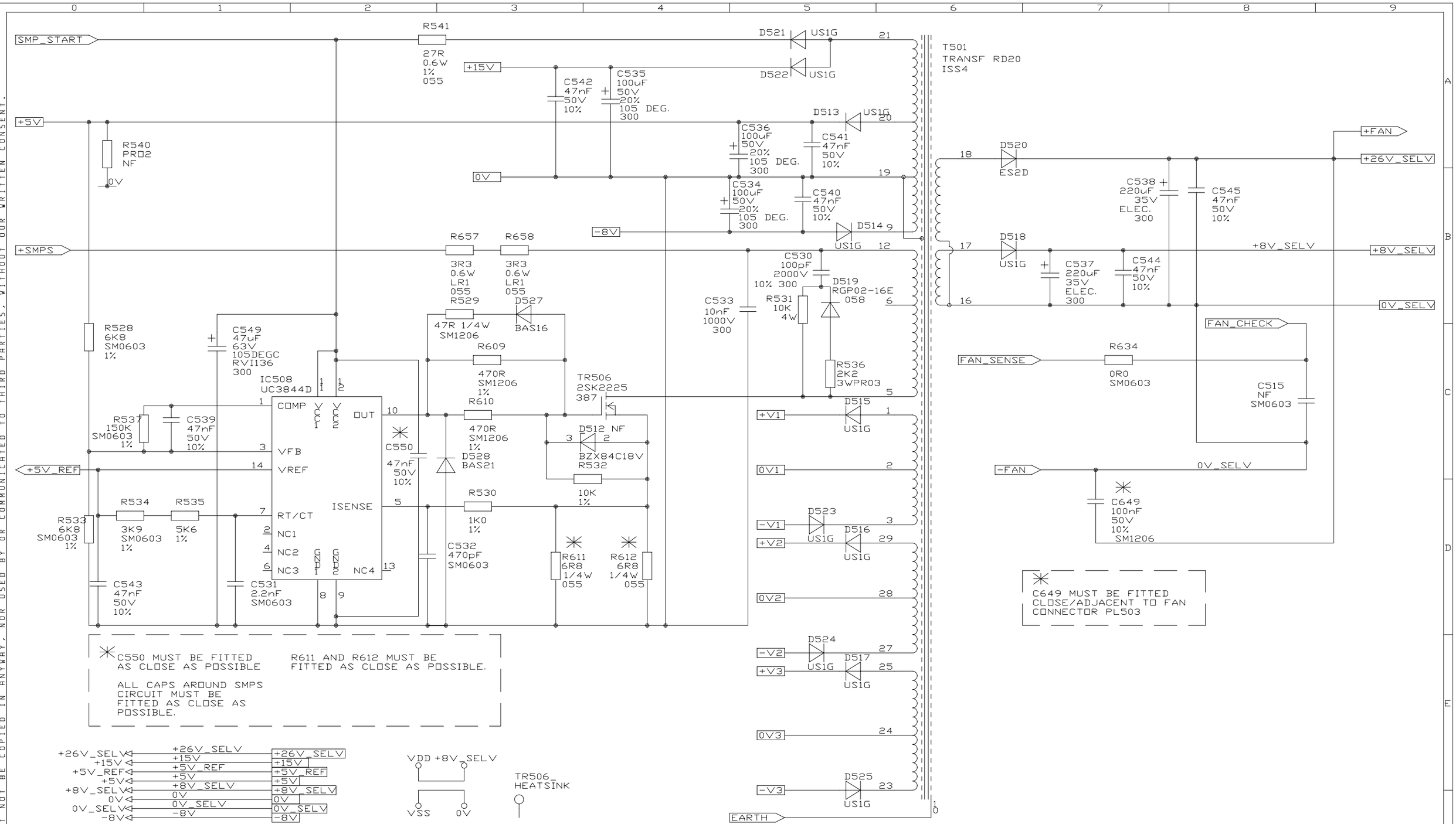

ISSUE	DATE	INITIALS	ISSUE	DATE	INITIALS
06.03	12/06/01	G.J.H.			
06.02	18/09/00	G.J.H.	07.01	12/08/02	G.J.H.
06.01	23/08/00	G.J.H.	07.00	04/10/01	G.J.H.
06.00	08/08/00	G.J.H.	06.04	21/08/01	G.J.H.

DRAWN G.J.H.
DATE
APPROVED
SCALE

A DIVISION OF EMERSON ELECTRIC Co.
CONTROL TECHNIQUES
CONTROL TECHNIQUES THE GRO NEWTOWN POWYS UK SY16 3BE

SUBCONTRACTOR
THIS DRAWING IS UNCONTROLLED

TITLE
RD40 - COMMANDER SE
SIZE 4 POWER BOARD
SMPSU & FAN CHECK

PART NO.
SUPERCEDES
DRG.NO. 7002-0339
SHT 7 OF 8
ISSUE 07.01
A3

THE DESIGN AND INFORMATION HELD ON THESE DRAWINGS ARE THE PROPERTY OF CONTROL TECHNIQUES plc. THEY MUST NOT BE COPIED IN ANYWAY, NOR USED BY OR COMMUNICATED TO THIRD PARTIES, WITHOUT OUR WRITTEN CONSENT.

THE DESIGN AND INFORMATION HELD ON THESE DRAWINGS ARE THE PROPERTY OF CONTROL TECHNIQUES plc.
THEY MUST NOT BE COPIED IN ANYWAY, NOR USED BY OR COMMUNICATED TO THIRD PARTIES, WITHOUT OUR WRITTEN CONSENT.

RATING TABLE		
SHAFT POWER KW	R554 SM0603, 1%	SH501 SH502, SH503
11	1K5 1127-4151	1200-9239 0R0023
15	2K2 1127-4221	1200-9239 0R0023
18.5	2K2 1127-4221	1200-9199 0R0019

NOTE: Drive size setup in software
R554 same as 15kW

SPARE GATES

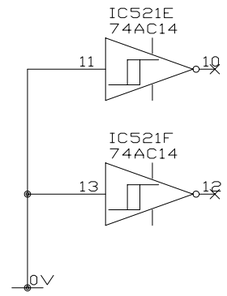

ISSUE	DATE	INITIALS	ISSUE	DATE	INITIALS
06.03	12/06/01	G.J.H.			
06.02	18/09/00	G.J.H.	07.01	12/08/02	G.J.H.
06.01	23/08/00	G.J.H.	07.00	04/10/01	G.J.H.
06.00	08/08/00	G.J.H.	06.04	21/08/01	G.J.H.

DRAWN G.J.H.
DATE
APPROVED
SCALE

A DIVISION OF EMERSON ELECTRIC Co.
CONTROL TECHNIQUES
CONTROL TECHNIQUES THE GRO NEWTOWN POWYS UK SY16 3BE

SUBCONTRACTOR
THIS DRAWING IS UNCONTROLLED

TITLE
RD40 - COMMANDER SE
SPARE GATES, DECOUPLING
RATING TABLE

PART NO.
SUPERCEDES
DRG.NO. 7002-0339
SHT 8 OF 8
ISSUE 07.01