THE DESIGN AND INFORMATION HELD ON THESE DRAWINGS ARE THE PROPERTY OF CONTROL TECHNIQUES plc.
THEY MUST NOT BE COPIED IN ANYWAY, NOR USED BY OR COMMUNICATED TO THIRD PARTIES, WITHOUT OUR WRITTEN CONSENT.

RD1 - CONTROL

70020323.SCH

RD30 - SIZE 3 POWER

70020335.SCH

BOARD			SCHEMATIC		
PANEL	RD1 - CONTROL	RD30 - POWER	PANEL	RD1 - CONTROL	RD30 - POWER
ISS.00.00	07.00	02.00	ISS.00.00	07.00	02.00
ISS.00.00	07.00	02.00	ISS.00.01	07.00	02.01
ISS.01.00	08.00	03.00	ISS.01.00	08.00	03.00
ISS.01.00	08.00	03.00	ISS.01.01	08.00	03.01
ISS.01.00	08.00	03.00	ISS.01.02	08.00	03.02
ISS.01.00	09.00	03.00	ISS.01.03	09.00	03.03
ISS.02.00	09.00	04.00	ISS.02.00	09.02	04.00
ISS.02.00	09.00	04.00	ISS.02.01	09.06	04.03
ISS.03.00	11.00	05.00	ISS.03.00	11.01	05.00
ISS.03.01	11.01	05.00	ISS.03.01	11.01	05.00
ISS.03.01	11.01	05.00	ISS.03.02	11.04	05.02
ISS.04.00	13.00	05.00	ISS.04.00	13.00	05.02
ISS.04.01	13.00	05.01	ISS.04.01	13.00	05.03

Planes on the gerbers tweaked no change to the schematics

PANEL1
RDFOB3 ISS.04.01

ISSUE	DATE	INITIALS	ISSUE	DATE	INITIALS
04.00	08/07/02	G.J.H.			
03.02	03/04/02	G.J.H.			
03.01	12/02/02	T.J.J.			
03.00	04/10/01	G.J.H.	04.01	08/07/02	G.J.H.

DRAWN G.J.H.
DATE
APPROVED
SCALE N/A

A DIVISION OF EMERSON ELECTRIC Co.
CONTROL TECHNIQUES
CONTROL TECHNIQUES THE GRO NEWTOWN POWYS UK SY16 3BE

SUBCONTRACTOR
THIS DRAWING IS UNCONTROLLED

TITLE RDFOB3 - COMMANDER SE SIZE 3 FAMILY OF BOARDS

PART NO. 3130-0693

SUPERCEDES

DRG.NO. 7032-0003

SHT 1 OF 1

ISSUE 04.01

A3

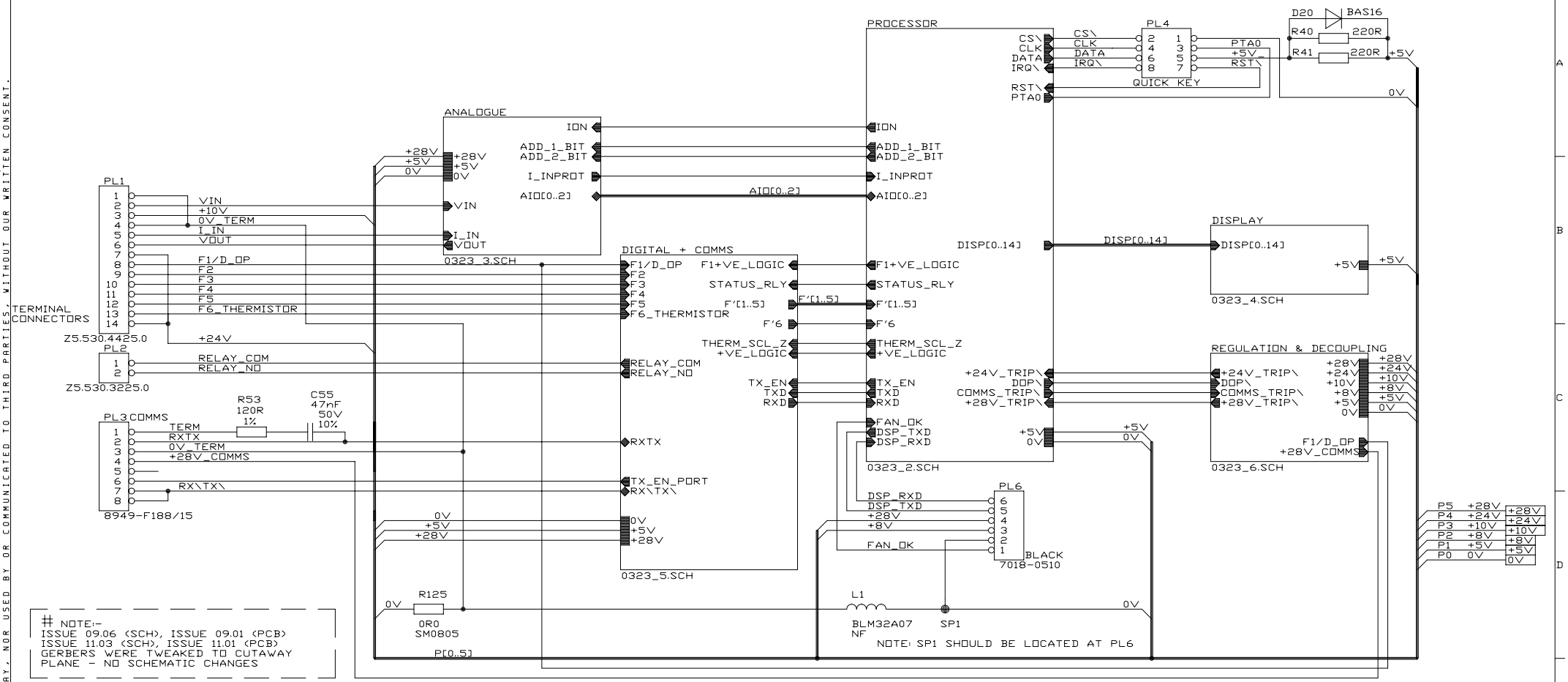

NOTE:-
ISSUE 09.06 (SCH), ISSUE 09.01 (PCB)
ISSUE 11.03 (SCH), ISSUE 11.01 (PCB)
GERBERS WERE TWEAKED TO CUTAWAY
PLANE - NO SCHEMATIC CHANGES

SCHEMATIC	BOARD
A	A
01.00	01.00
02.00	02.00
03.00	03.00
04.00	04.00
05.00	05.00
06.00	06.00
06.10	06.00
07.00	07.00
07.10	07.00
07.01	07.00
07.11	07.00

SCHEMATIC	BOARD
08.00	08.00
08.10	08.00
09.00	09.00
09.01	09.00
09.02	09.00
09.03	09.00
09.04	09.00
09.05	09.00
09.06	09.01 #
10.00	10.00
11.00	11.00
11.01	11.00

SCHEMATIC	BOARD
11.02	11.00
11.03	11.01 #
11.04	11.01
12.00	12.00
13.00	13.00

ISSUE	DATE	INITIALS	ISSUE	DATE	INITIALS
12.00	17/01/02	G.J.H.			
11.04	03/04/02	G.J.H.			
11.03	25/01/02	G.J.H.			
11.02	22/10/01	G.J.H.	13.00	17/04/02	G.J.H.

DRAWN T.J.J.
DATE
APPROVED
SCALE N/A

A DIVISION OF EMERSON ELECTRIC Co.
CONTROL TECHNIQUES
CONTROL TECHNIQUES THE GRO NEWTOWN POWYS UK SY16 3BE

SUBCONTRACTOR
THIS DRAWING IS UNCONTROLLED

TITLE
RD1 - CONTROL

PART NO.
SUPERCEDES
DRG.NO. 7002-0323
SHT 1 OF 6
ISSUE 13.00

THE DESIGN AND INFORMATION HELD ON THESE DRAWINGS ARE THE PROPERTY OF CONTROL TECHNIQUES plc.
THEY MUST NOT BE COPIED IN ANYWAY, NOR USED BY OR COMMUNICATED TO THIRD PARTIES, WITHOUT OUR WRITTEN CONSENT.

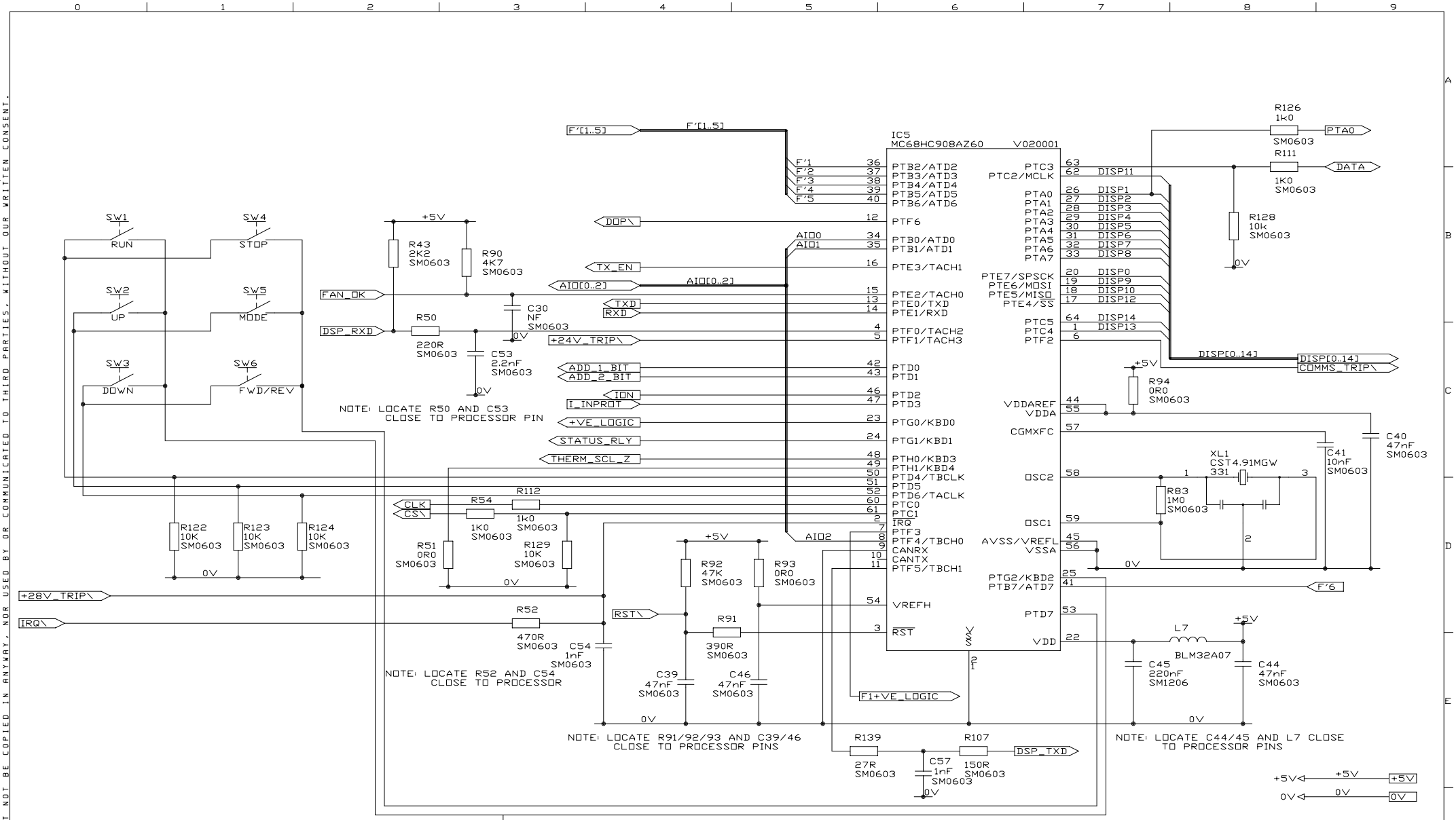

12.00	17/01/02	G.J.H.				
11.04	03/04/02	G.J.H.				
11.03	25/01/02	G.J.H.				
11.02	22/10/01	G.J.H.	13.00	17/04/02	G.J.H.	
ISSUE	DATE	INITIALS	ISSUE	DATE	INITIALS	

DRAWN T.J.J.
DATE
APPROVED
SCALE N/A

A DIVISION OF EMERSON ELECTRIC Co.
CONTROL TECHNIQUES
CONTROL TECHNIQUES THE GRO NEWTOWN POWYS UK SY16 3BE

SUBCONTRACTOR
THIS DRAWING IS UNCONTROLLED

TITLE
RD1 - CONTROL PROCESSOR

PART NO.
SUPERCEDES
DRG.NO. 7002-0323
SHT 2 OF 6
ISSUE 13.00

THE DESIGN AND INFORMATION HELD ON THESE DRAWINGS ARE THE PROPERTY OF CONTROL TECHNIQUES plc. THEY MUST NOT BE COPIED IN ANYWAY, NOR USED BY OR COMMUNICATED TO THIRD PARTIES, WITHOUT OUR WRITTEN CONSENT.

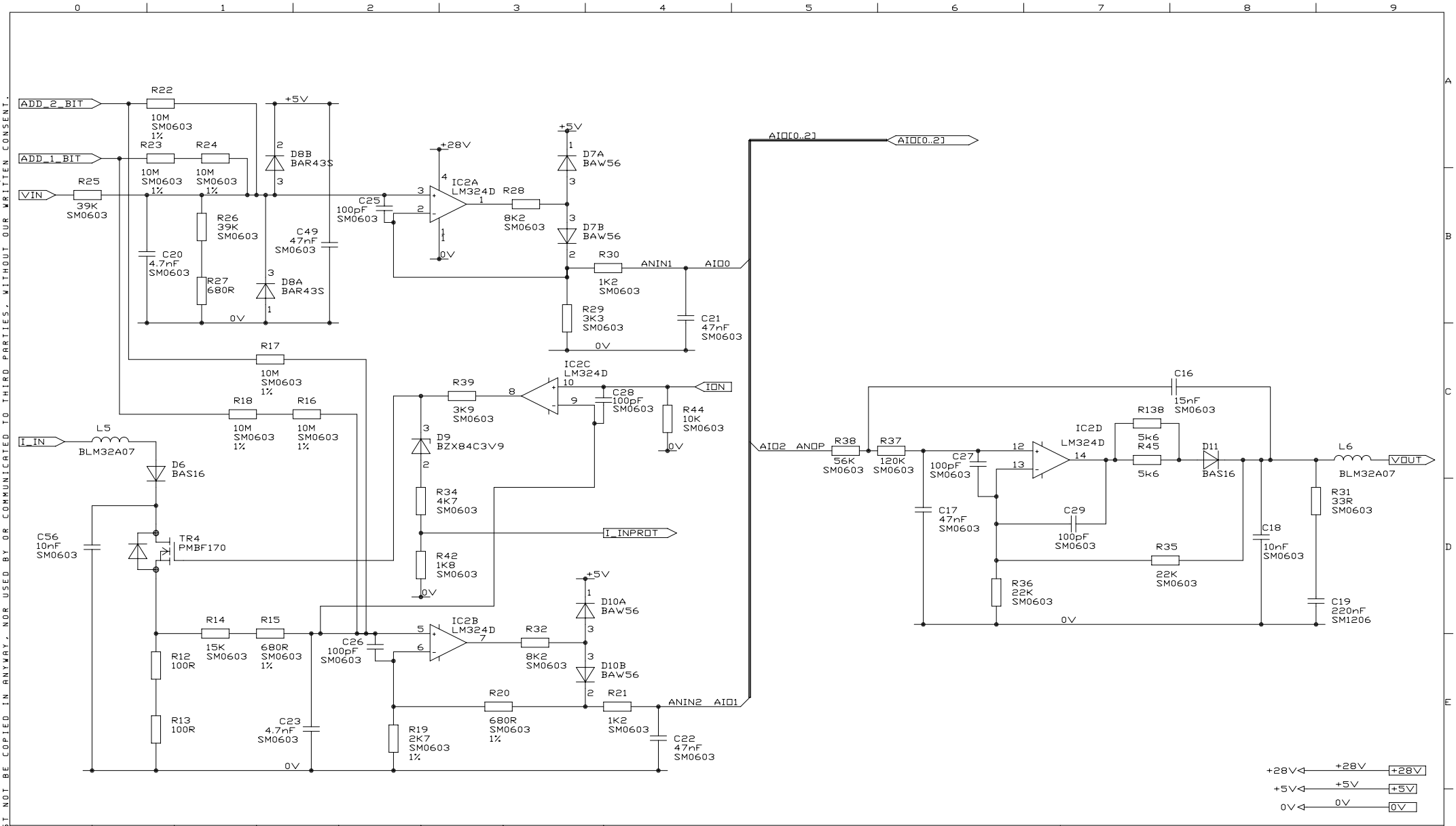

THE DESIGN AND INFORMATION HELD ON THESE DRAWINGS ARE THE PROPERTY OF CONTROL TECHNIQUES plc. THEY MUST NOT BE COPIED IN ANYWAY, NOR USED BY OR COMMUNICATED TO THIRD PARTIES, WITHOUT OUR WRITTEN CONSENT.

ISSUE	DATE	INITIALS	ISSUE	DATE	INITIALS
12.00	17/01/02	G.J.H.			
11.04	03/04/02	G.J.H.			
11.03	25/01/02	G.J.H.			
11.02	22/10/01	G.J.H.	13.00	17/04/02	G.J.H.

DRAWN: T.J.J.
DATE:
APPROVED:
SCALE: N/A

A DIVISION OF EMERSON ELECTRIC Co.
CONTROL TECHNIQUES
CONTROL TECHNIQUES THE GRO NEWTOWN POWYS UK SY16 3BE

SUBCONTRACTOR: THIS DRAWING IS UNCONTROLLED

TITLE: RD1 - CONTROL ANALOGUE

PART NO.:
SUPERCEDES:
DRG.NO.: 7002-0323
SHT: 3 OF 6
ISSUE: 13.00

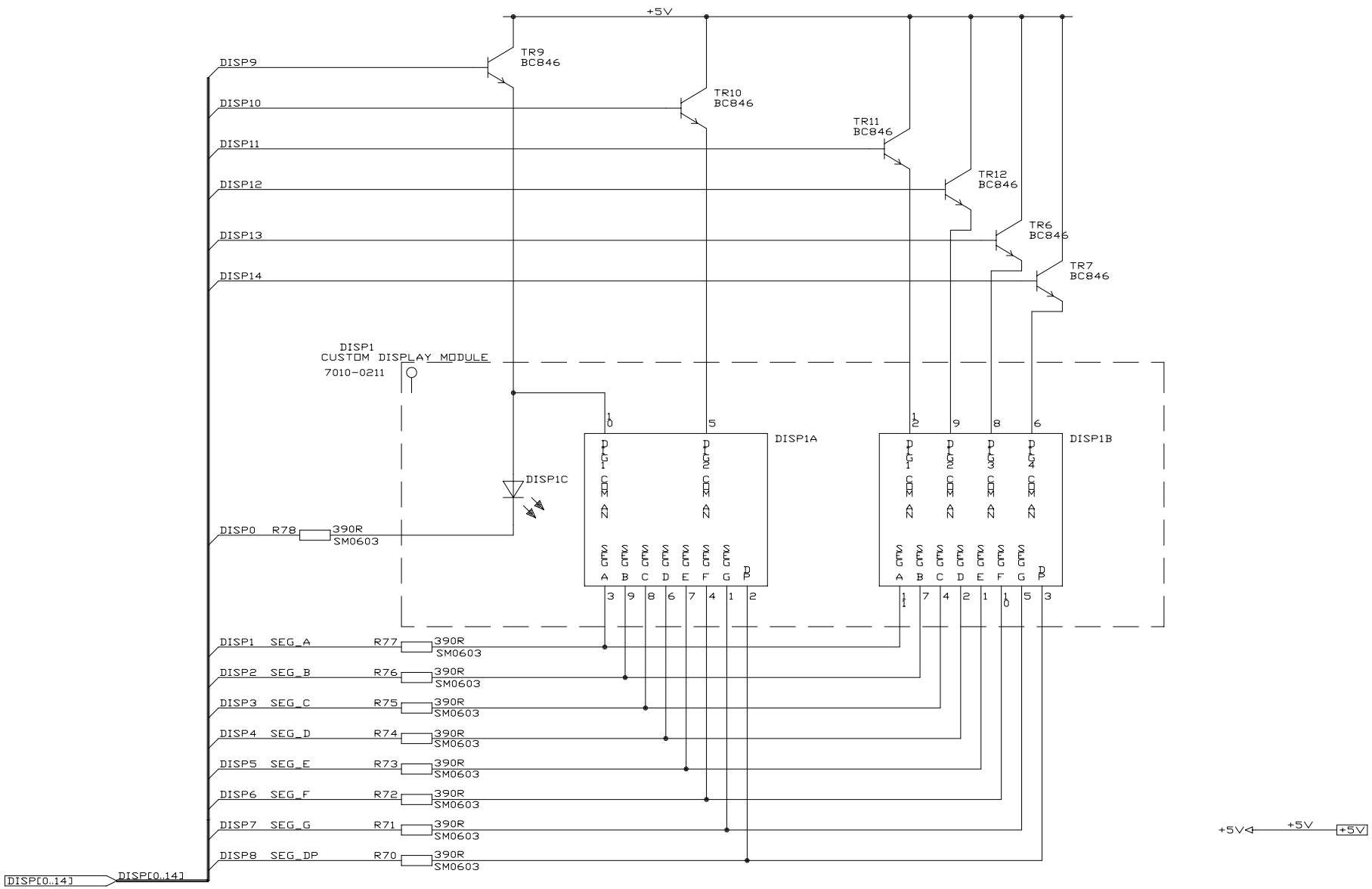

THE DESIGN AND INFORMATION HELD ON THESE DRAWINGS ARE THE PROPERTY OF CONTROL TECHNIQUES plc.
THEY MUST NOT BE COPIED IN ANYWAY, NOR USED BY OR COMMUNICATED TO THIRD PARTIES, WITHOUT OUR WRITTEN CONSENT.

ISSUE	DATE	INITIALS	ISSUE	DATE	INITIALS
12.00	17/01/02	G.J.H.			
11.04	03/04/02	G.J.H.			
11.03	25/01/02	G.J.H.			
11.02	22/10/01	G.J.H.	13.00	17/04/02	G.J.H.

DRAWN T.J.J.
DATE
APPROVED
SCALE N/A

CONTROL TECHNIQUES
A DIVISION OF EMERSON ELECTRIC Co.
CONTROL TECHNIQUES THE GRO NEWTOWN POWYS UK SY16 3BE

SUBCONTRACTOR
THIS DRAWING IS UNCONTROLLED

TITLE
RD1 - CONTROL DISPLAY

PART NO.
SUPERCEDES
DRG.NO. 7002-0323
SHT 4 OF 6
ISSUE 13.00

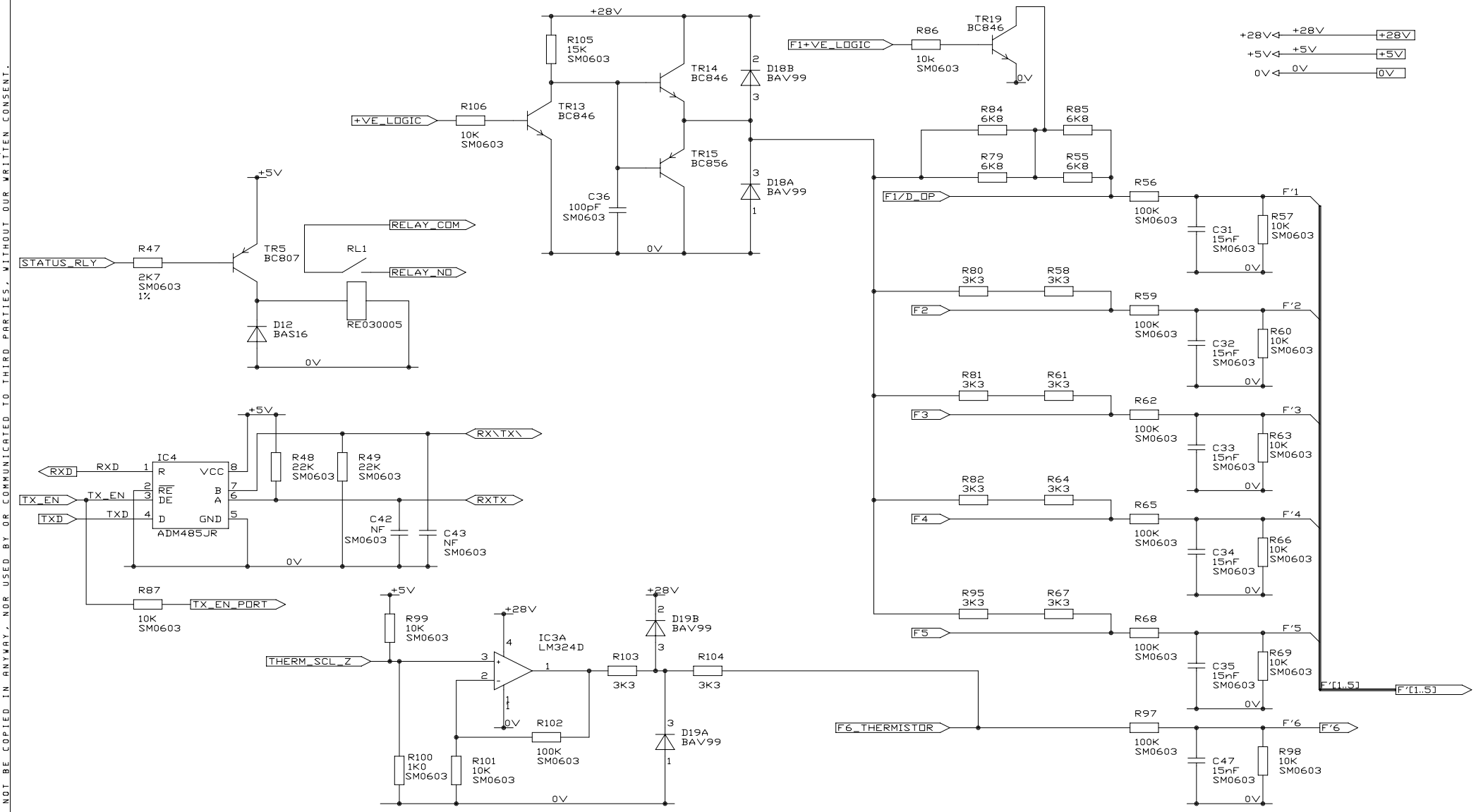

THE DESIGN AND INFORMATION HELD ON THESE DRAWINGS ARE THE PROPERTY OF CONTROL TECHNIQUES plc. THEY MUST NOT BE COPIED IN ANYWAY, NOR USED BY OR COMMUNICATED TO THIRD PARTIES, WITHOUT OUR WRITTEN CONSENT.

ISSUE	DATE	INITIALS	ISSUE	DATE	INITIALS
12.00	17/01/02	G.J.H.			
11.04	03/04/02	G.J.H.			
11.03	25/01/02	G.J.H.			
11.02	22/10/01	G.J.H.	13.00	17/04/02	G.J.H.

DRAWN T.J.J.
DATE
APPROVED
SCALE N/A

A DIVISION OF EMERSON ELECTRIC Co.
CONTROL TECHNIQUES
CONTROL TECHNIQUES THE GRO NEWTOWN POWYS UK SY16 3BE

SUBCONTRACTOR
THIS DRAWING IS UNCONTROLLED

TITLE
RD1 - CONTROL
DIGITAL & COMMS

PART NO.
SUPERCEDES
DRG.NO. 7002-0323
SHT 5 OF 6
ISSUE 13.00

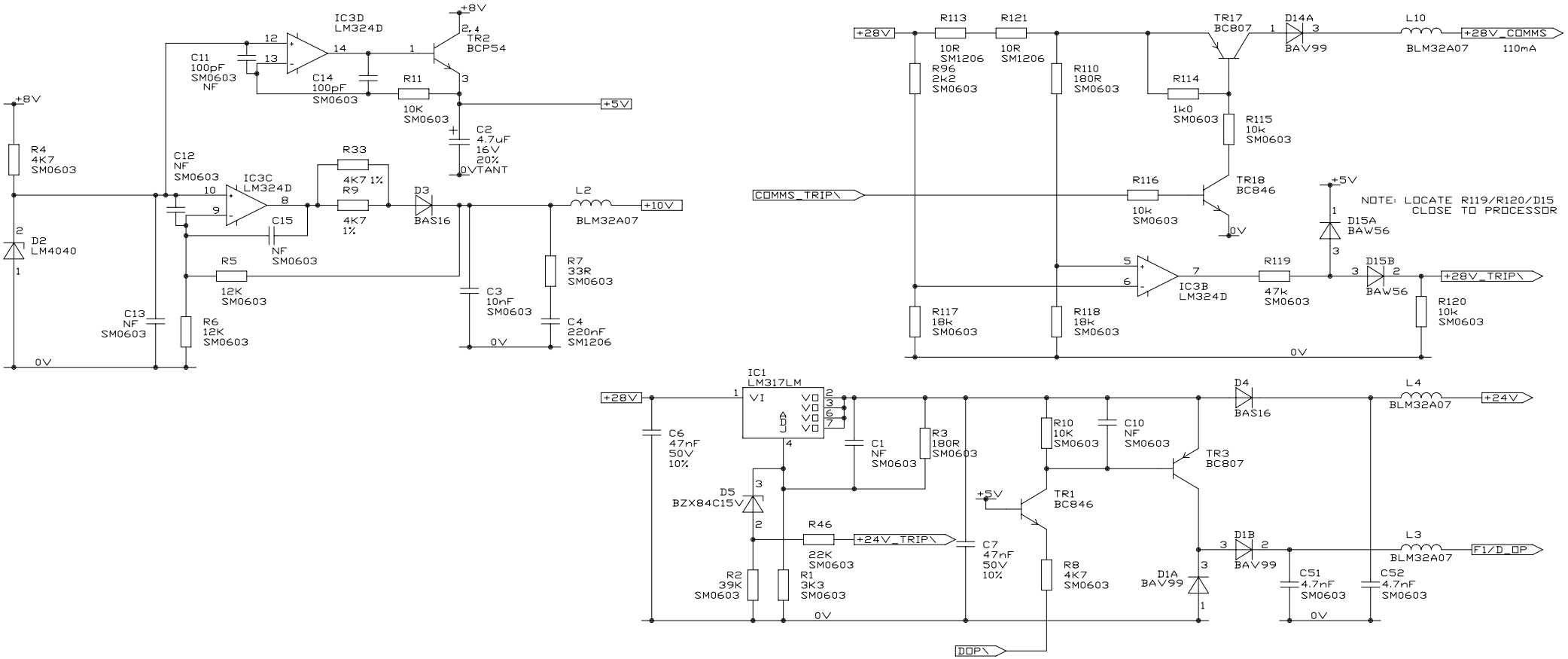

DECOUPLING

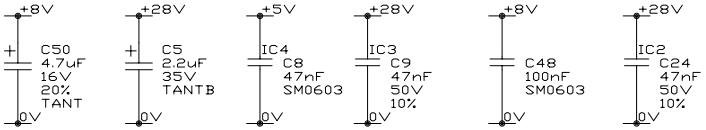

PCB1
RD1 ISS.13.00

POWER

IC	SHEET	+5V	0V	+28V	NOTES:
1	6			1	
2	3		11	4	PLEASE SEE SHEET
3	5		11	4	
4	5	8	5		
5	2		21		PLEASE SEE SHEET FOR VVDA(55) & VSSA(56)

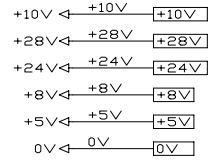

ISSUE	DATE	INITIALS	ISSUE	DATE	INITIALS
12.00	17/01/02	G.J.H.			
11.04	03/04/02	G.J.H.			
11.03	25/01/02	G.J.H.			
11.02	22/10/01	G.J.H.	13.00	17/04/02	G.J.H.

DRAWN T.J.J.
DATE
APPROVED
SCALE N/A

A DIVISION OF EMERSON ELECTRIC Co.
CONTROL TECHNIQUES
CONTROL TECHNIQUES THE GRO NEWTOWN POWYS UK SY16 3BE

SUBCONTRACTOR
THIS DRAWING IS UNCONTROLLED

TITLE
RD1 - CONTROL
REGULATION & DECOUPLING

PART NO.
SUPERCEDES
DRG.NO. 7002-0323
SHT 6 OF 6
ISSUE 13.00

THE DESIGN AND INFORMATION HELD ON THESE DRAWINGS ARE THE PROPERTY OF CONTROL TECHNIQUES plc. THEY MUST NOT BE COPIED IN ANYWAY, NOR USED BY OR COMMUNICATED TO THIRD PARTIES, WITHOUT OUR WRITTEN CONSENT.

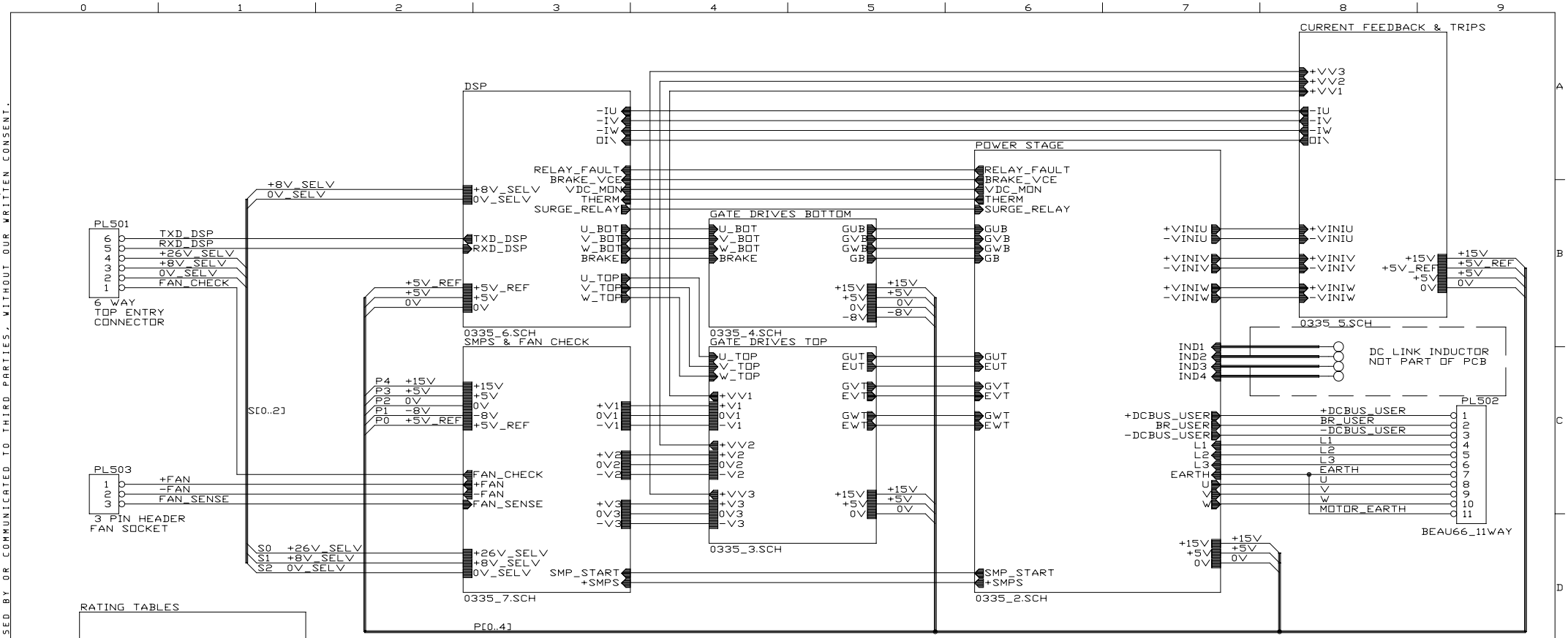

CIRCUIT	BOARD
ISSUE 00.00	ISSUE 00.00
ISSUE 01.00	ISSUE 01.00
ISSUE 02.00	ISSUE 02.00
ISSUE 02.01	ISSUE 02.00
ISSUE 03.00	ISSUE 03.00
ISSUE 03.01	ISSUE 03.00
ISSUE 03.02	ISSUE 03.00

CIRCUIT	BOARD
ISSUE 03.03	ISSUE 03.00
ISSUE 03.04	ISSUE 03.01
ISSUE 04.00	ISSUE 04.00
ISSUE 04.01	ISSUE 04.00
ISSUE 04.02	ISSUE 04.00
ISSUE 04.03	ISSUE 04.00
ISSUE 04.04	ISSUE 04.00

CIRCUIT	BOARD
ISSUE 05.00	ISSUE 05.00
ISSUE 05.01	ISSUE 05.00
ISSUE 05.02	ISSUE 05.00
ISSUE 05.03	ISSUE 05.01

PCB
RD30 ISS.05.01

ISSUE	DATE	INITIALS	ISSUE	DATE	INITIALS
05.01	07/01/02	G.J.H.			
05.00	04/10/01	G.J.H.			
04.04	20/08/01	G.J.H.	05.03	08/07/02	G.J.H.
04.03	12/06/01	G.J.H.	05.02	03/04/02	G.J.H.

DRAWN T.J.J.
DATE
APPROVED
SCALE

A DIVISION OF EMERSON ELECTRIC Co.

CONTROL TECHNIQUES

CONTROL TECHNIQUES THE GRO NEWTOWN POWYS UK SY16 3BE

SUBCONTRACTOR

THIS DRAWING IS UNCONTROLLED

TITLE
RD30 - COMMANDER SE
SIZE 3 200V/400V
POWER BOARD

PART NO. 3130-0692

SUPERCEDES

DRG.NO. 7002-0335

SHT 1 OF 8

ISSUE 05.03

THE DESIGN AND INFORMATION HELD ON THESE DRAWINGS ARE THE PROPERTY OF CONTROL TECHNIQUES plc.
THEY MUST NOT BE COPIED IN ANYWAY, NOR USED BY OR COMMUNICATED TO THIRD PARTIES, WITHOUT OUR WRITTEN CONSENT.

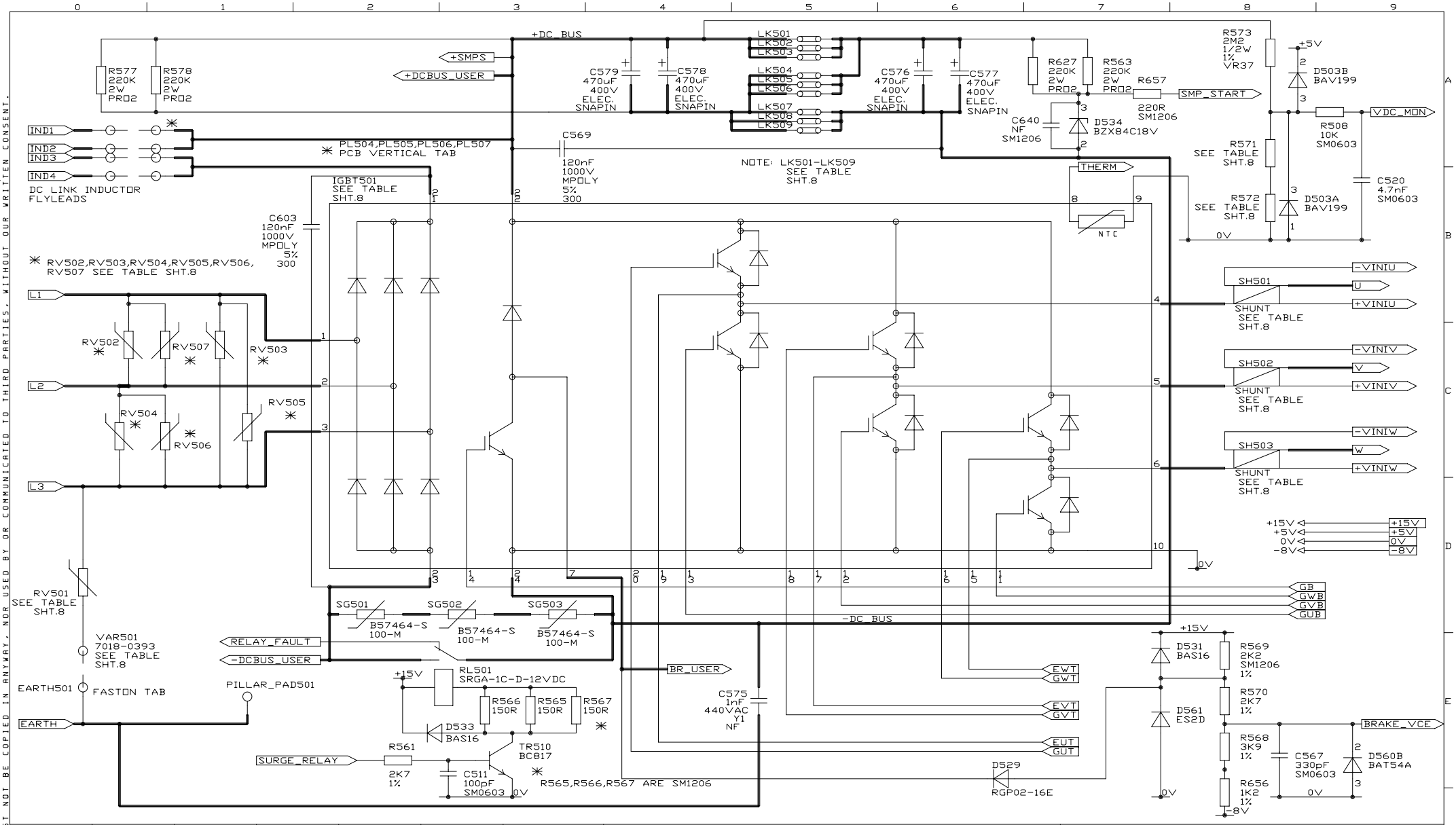

ISSUE	DATE	INITIALS	ISSUE	DATE	INITIALS
05.01	07/01/02	G.J.H.			
05.00	04/10/01	G.J.H.			
04.04	20/08/01	G.J.H.	05.03	08/07/02	G.J.H.
04.03	12/06/01	G.J.H.	05.02	03/04/02	G.J.H.

DRAWN T.J.J.
DATE
APPROVED
SCALE

A DIVISION OF EMERSON ELECTRIC Co.

CONTROL TECHNIQUES

CONTROL TECHNIQUES THE GRO NEWTOWN POWYS UK SY16 3BE

SUBCONTRACTOR

THIS DRAWING IS UNCONTROLLED

TITLE

RD30 - COMMANDER SE
SIZE 3 200V/400V POWER
POWER STAGE

PART NO.

SUPERCEDES

DRG.NO. 7002-0335

SHT 2 OF 8

ISSUE 05.03

A3

THE DESIGN AND INFORMATION HELD ON THESE DRAWINGS ARE THE PROPERTY OF CONTROL TECHNIQUES plc. THEY MUST NOT BE COPIED IN ANYWAY, NOR USED BY OR COMMUNICATED TO THIRD PARTIES, WITHOUT OUR WRITTEN CONSENT.

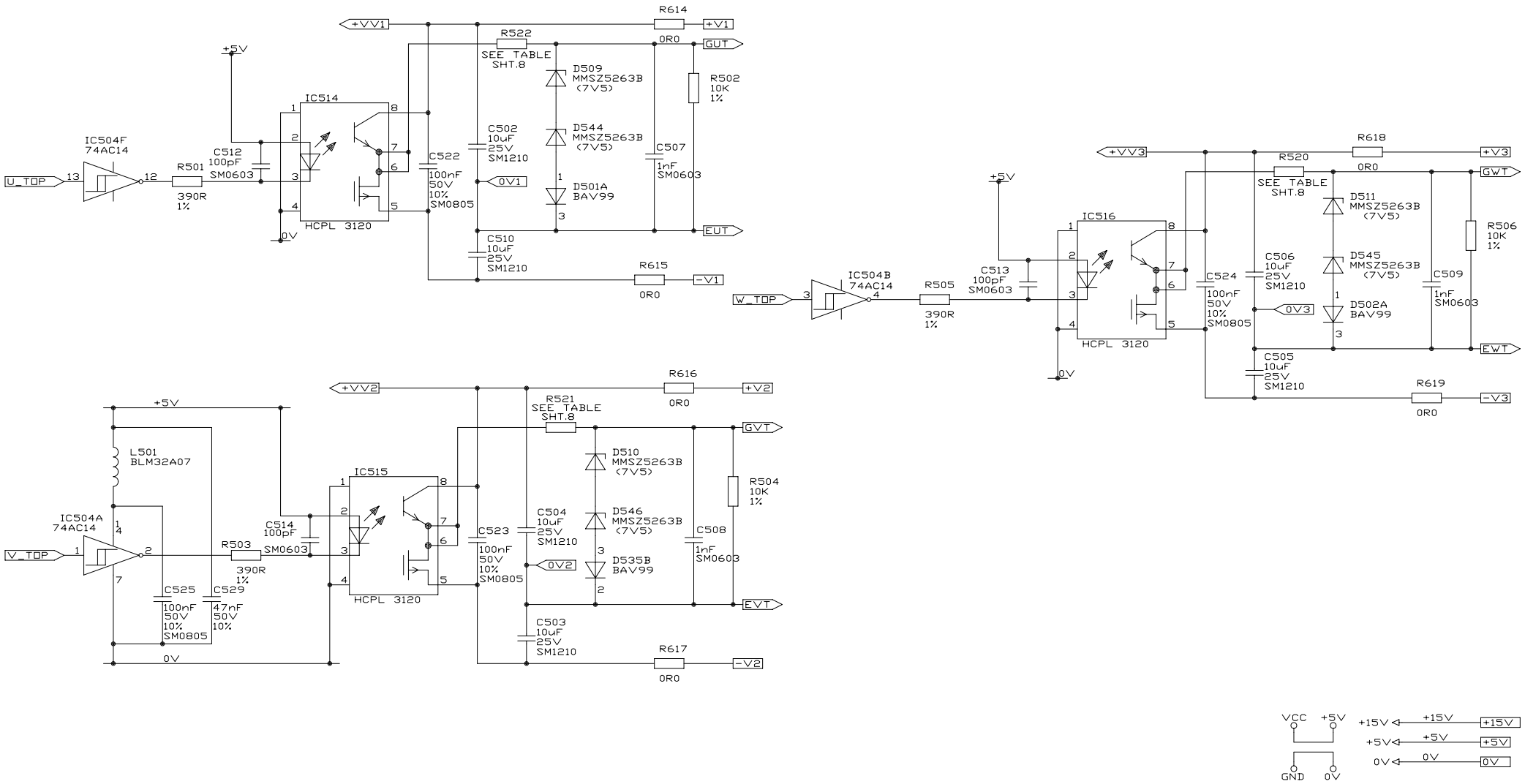

THE DESIGN AND INFORMATION HELD ON THESE DRAWINGS ARE THE PROPERTY OF CONTROL TECHNIQUES plc. THEY MUST NOT BE COPIED IN ANYWAY, NOR USED BY OR COMMUNICATED TO THIRD PARTIES, WITHOUT OUR WRITTEN CONSENT.

ISSUE	DATE	INITIALS	ISSUE	DATE	INITIALS
05.01	07/01/02	G.J.H.			
05.00	04/10/01	G.J.H.			
04.04	20/08/01	G.J.H.	05.03	08/07/02	G.J.H.
04.03	12/06/01	G.J.H.	05.02	03/04/02	G.J.H.

DRAWN T.J.J.
DATE
APPROVED
SCALE

A DIVISION OF EMERSON ELECTRIC Co.
CONTROL TECHNIQUES
CONTROL TECHNIQUES THE GRO NEWTOWN POWYS UK SY16 3BE

SUBCONTRACTOR
THIS DRAWING IS UNCONTROLLED

TITLE
RD30 - COMMANDER SE
SIZE 3 200V/400V POWER
GATE DRIVES - TOP

PART NO.
SUPERCEDES
DRG.NO. 7002-0335
SHT 3 OF 8
ISSUE 05.03

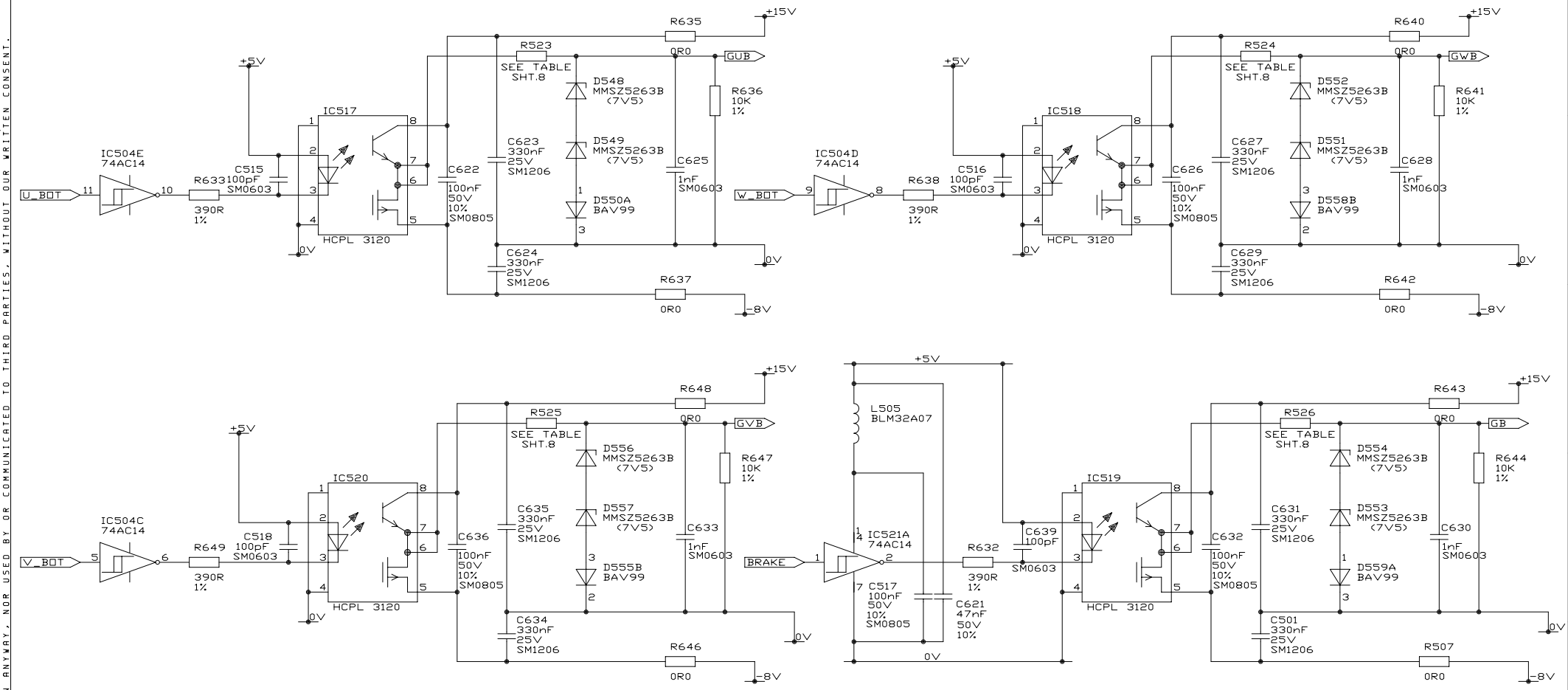

THE DESIGN AND INFORMATION HELD ON THESE DRAWINGS ARE THE PROPERTY OF CONTROL TECHNIQUES plc. THEY MUST NOT BE COPIED IN ANYWAY, NOR USED BY OR COMMUNICATED TO THIRD PARTIES, WITHOUT OUR WRITTEN CONSENT.

ISSUE	DATE	INITIALS	ISSUE	DATE	INITIALS
05.01	07/01/02	G.J.H.			
05.00	04/10/01	G.J.H.			
04.04	20/08/01	G.J.H.	05.03	08/07/02	G.J.H.
04.03	12/06/01	G.J.H.	05.02	03/04/02	G.J.H.

DRAWN T.J.J.
DATE
APPROVED
SCALE

A DIVISION OF EMERSON ELECTRIC Co.
CONTROL TECHNIQUES
CONTROL TECHNIQUES THE GRO NEWTOWN POWYS UK SY16 3BE

SUBCONTRACTOR
THIS DRAWING IS UNCONTROLLED

TITLE
RD30 - COMMANDER SE
SIZE 3 200V/400V POWER
GATE DRIVES - BOTTOM

PART NO.
SUPERCEDES
DRG.NO. 7002-0335
SHT 4 OF 8
ISSUE 05.03

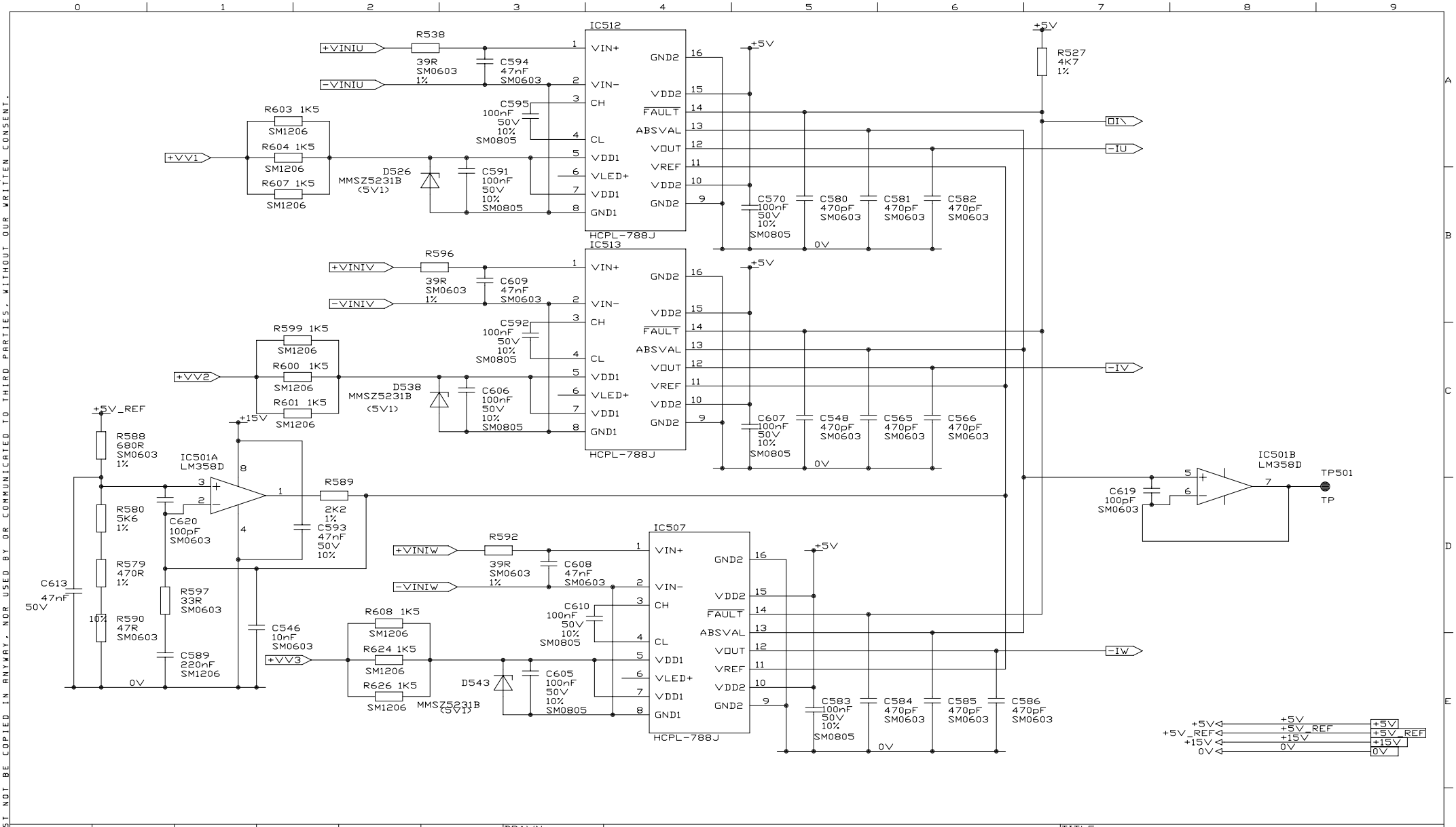

THE DESIGN AND INFORMATION HELD ON THESE DRAWINGS ARE THE PROPERTY OF CONTROL TECHNIQUES plc. THEY MUST NOT BE COPIED IN ANYWAY, NOR USED BY OR COMMUNICATED TO THIRD PARTIES, WITHOUT OUR WRITTEN CONSENT.

ISSUE	DATE	INITIALS	ISSUE	DATE	INITIALS
05.01	07/01/02	G.J.H.			
05.00	04/10/01	G.J.H.			
04.04	20/08/01	G.J.H.	05.03	08/07/02	G.J.H.
04.03	12/06/01	G.J.H.	05.02	03/04/02	G.J.H.

DRAWN T.J.J.
DATE
APPROVED
SCALE

A DIVISION OF EMERSON ELECTRIC Co.

CONTROL TECHNIQUES

CONTROL TECHNIQUES THE GRO NEWTOWN POWYS UK SY16 3BE

SUBCONTRACTOR

THIS DRAWING IS UNCONTROLLED

TITLE
RD30 - COMMANDER SE
SIZE 3 200V/400V POWER
CURRENT FEEDBACK & TRIPS

PART NO.

SUPERCEDES

DRG.NO. 7002-0335

SHT 5 OF 8

ISSUE 05.03

A3

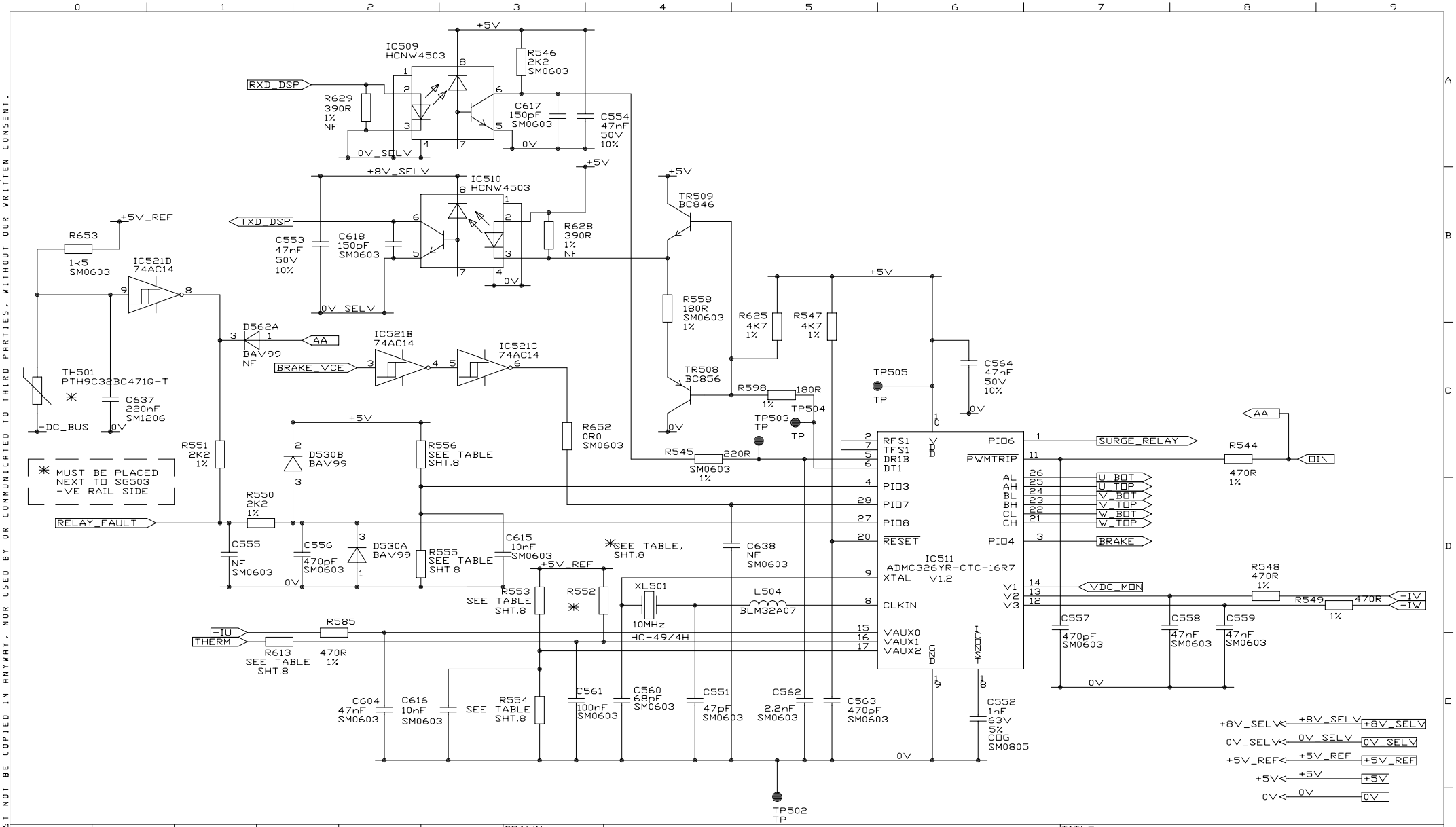

THE DESIGN AND INFORMATION HELD ON THESE DRAWINGS ARE THE PROPERTY OF CONTROL TECHNIQUES plc.
THEY MUST NOT BE COPIED IN ANYWAY, NOR USED BY OR COMMUNICATED TO THIRD PARTIES, WITHOUT OUR WRITTEN CONSENT.

ISSUE	DATE	INITIALS	ISSUE	DATE	INITIALS
05.01	07/01/02	G.J.H.			
05.00	04/10/01	G.J.H.			
04.04	20/08/01	G.J.H.	05.03	08/07/02	G.J.H.
04.03	12/06/01	G.J.H.	05.02	03/04/02	G.J.H.

DRAWN
DATE
APPROVED
SCALE

A DIVISION OF EMERSON ELECTRIC Co.

CONTROL TECHNIQUES

CONTROL TECHNIQUES THE GRO NEWTOWN POWYS UK SY16 3BE

SUBCONTRACTOR

THIS DRAWING IS UNCONTROLLED

TITLE

RD30 - COMMANDER SE
SIZE 3 200V/400V
POWER BOARD - DSP

PART NO.

SUPERCEDES

DRG.NO. 7002-0335

SHT 6 OF 8

ISSUE 05.03

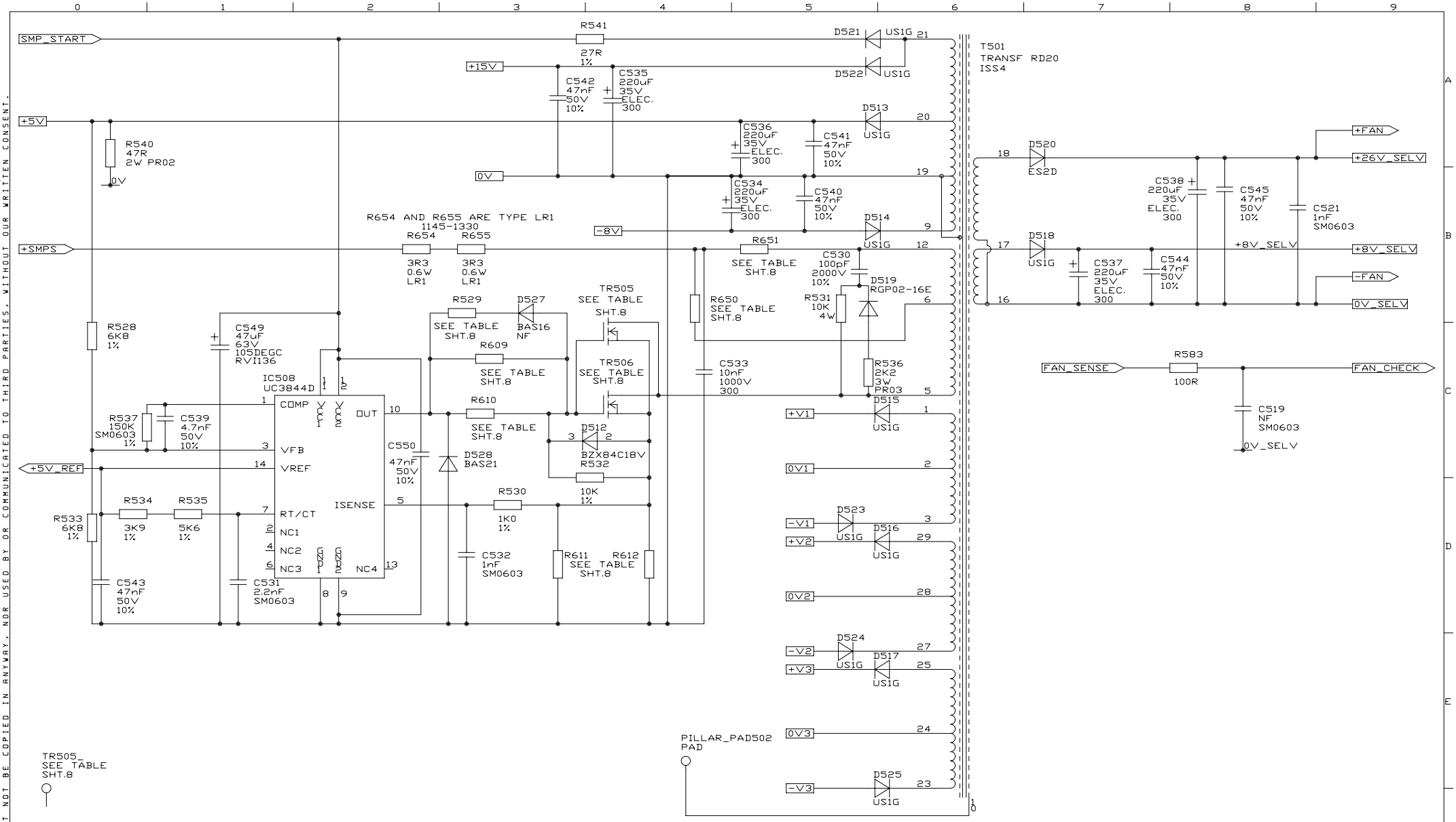

THE DESIGN AND INFORMATION HELD ON THESE DRAWINGS ARE THE PROPERTY OF CONTROL TECHNIQUES plc. THEY MUST NOT BE COPIED IN ANYWAY, NOR USED BY OR COMMUNICATED TO THIRD PARTIES, WITHOUT OUR WRITTEN CONSENT.

ISSUE	DATE	INITIALS	ISSUE	DATE	INITIALS
05.01	07/01/02	G.J.H.			
05.00	04/10/01	G.J.H.			
04.04	20/08/01	G.J.H.	05.03	08/07/02	G.J.H.
04.03	12/06/01	G.J.H.	05.02	03/04/02	G.J.H.

DRAWN T.J.J.
DATE
APPROVED
SCALE

A DIVISION OF EMERSON ELECTRIC Co.
CONTROL TECHNIQUES
CONTROL TECHNIQUES THE GRO NEWTOWN POWYS UK SY16 3BE

SUBCONTRACTOR
THIS DRAWING IS UNCONTROLLED

TITLE
RD30 - COMMANDER SE
SIZE 3 200V/400V POWER
SMPSU & FAN CHECK

PART NO.
SUPERCEDES
DRG.NO. 7002-0335
SHT 7 OF 8
ISSUE 05.03

RATING TABLE			200V/400V (page 6)		200V/400V LINKS (page 2)			SMPSU 200V/400V (page 7)		SMPSU (page 7)						SHAFT POWER RATING (page 6)	
MOTOR RATING KW	I/P PHASE NO.	200V/ 400V	R556	R555	LK501- LK503	LK504- LK506	LK507- LK509	R650	R651	R529 SM1206 1%	R609,R610 SM1206,1%	R611 0.6W,1%	R612 0.6W,1%	TR505	TR506	R553	R554
5.5	3	200V	NF	22K 1127-5221	0R0 3420-0001	NF	0R0 3420-0001	0R0,1/4W 1122-0000-055	NF	NF	68R 1125-2681	3R9 1145-1391	4R7 1145-1471	IRFBF20 2145-0020	NF	1K2 1127-4121	2K2 1127-4221
7.5	3	200V	NF	22K 1127-5221	0R0 3420-0001	NF	0R0 3420-0001	0R0,1/4W 1122-0000-055	NF	NF	68R 1125-2681	3R9 1145-1391	4R7 1145-1471	IRFBF20 2145-0020	NF	3K3 1127-4331	NF
5.5	3	400V	22K 1127-5221	NF	NF	0R0 3420-0001	NF	NF	0R0,1/4W 1122-0000-055	NF	47R 1125-2471	6R8 1145-1681	6R8 1145-1681	NF	2SK2225 2145-2225	5K6 1127-4561	3K3 1127-4331
7.5	3	400V	22K 1127-5221	NF	NF	0R0 3420-0001	NF	NF	0R0,1/4W 1122-0000-055	NF	47R 1125-2471	6R8 1145-1681	6R8 1145-1681	NF	2SK2225 2145-2225	3K9 1127-4391	3K3 1127-4331

RATING TABLE			IGBT DRIVERS (page 3&4)	POWER (page 2)	DC BUS MON (page 2)		CURRENT MEASUREMENT (page 2)			L-E VOLTAGE SURGE CLAMP (page 2)		L-L VOLTAGE SURGE CLAMPS (page 2)	
MOTOR RATING KW	I/P PHASE NO.	200V/ 400V	R520 - R526 0.6W,1%,MRS25	IGBT501	R571 SM0805,1%	R572 SM0805,1%	SH501	SH502	SH503	RV501	VAR501	RV502,RV503 RV504	RV505,RV506 RV507
5.5	3	200V	39R 1145-2391-055	7MBR75SB060-20 2450-7562	18K 1124-5181	3K3 1124-4331	R0025,2% 1200-9259	R0025,2% 1200-9259	R0025,2% 1200-9259	NF	NF	S20K320S5R7M3,5 2481-1320	NF
7.5	3	200V	39R 1145-2391-055	7MBR75SB060-20 2450-7562	18K 1124-5181	3K3 1124-4331	R0025,2% 1200-9259	R0025,2% 1200-9259	R0025,2% 1200-9259	NF	NF	S20K320S5R7M3,5 2481-1320	NF
5.5	3	400V	22R 1145-2221-055	7MBR50SB120-20 2456-0051	6K8 1124-4681	3K9 1124-4391	R0043,2% 1200-9439	R0043,2% 1200-9439	R0043,2% 1200-9439	S20K680S5M3,5 2481-1680	7018-0393 3472-1393	NF	S20S550AS5M3,5 2481-1550
7.5	3	400V	22R 1145-2221-055	7MBR50SB120-20 2456-0051	6K8 1124-4681	3K9 1124-4391	R0043,2% 1200-9439	R0043,2% 1200-9439	R0043,2% 1200-9439	S20K680S5M3,5 2481-1680	7018-0393 3472-1393	NF	S20S550AS5M3,5 2481-1550

Note:
All resistors in tables are SM0603, 1% unless otherwise stated

SPARE GATES

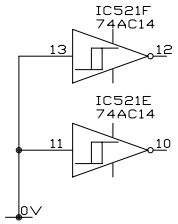

RATING TABLE			200V/400V (page 6)		SMPSU (page 7)
MOTOR RATING KW	I/P PHASE NO.	200V/ 400V	R552	R613	TR505 HEATSINK
5.5	3	200V	5K6 1124-4561 SM0805	220R 1127-3221	NF
7.5	3	200V	5K6 1124-4561 SM0805	220R 1127-3221	NF
5.5	3	400V	6K8 1124-4681 SM0805	270R 1127-3271	PF745 3555-0746
7.5	3	400V	6K8 1124-4681 SM0805	270R 1127-3271	PF745 3555-0746

✳ NOTE

'200V' DENOTES 200-240VAC +/-10% INPUT VOLTAGE RATING

'400V' DENOTES 380-480VAC +/-10% INPUT VOLTAGE RATING

ISSUE	DATE	INITIALS	ISSUE	DATE	INITIALS
05.01	07/01/02	G.J.H.			
05.00	04/10/01	G.J.H.			
04.04	20/08/01	G.J.H.	05.03	08/07/02	G.J.H.
04.03	12/06/01	G.J.H.	05.02	03/04/02	G.J.H.

DRAWN
DATE
APPROVED
SCALE

A DIVISION OF EMERSON ELECTRIC Co.

CONTROL TECHNIQUES

CONTROL TECHNIQUES THE GRO NEWTOWN POWYS UK SY16 3BE

SUBCONTRACTOR

THIS DRAWING IS UNCONTROLLED

TITLE

RD30 - COMMANDER SE SIZE 3 200V/400V POWER RATING TABLE & SPARE GATES

PART NO.

SUPERCEDES

DRG.NO. 7002-0335

SHT 8 OF 8

ISSUE 05.03

A3

THE DESIGN AND INFORMATION HELD ON THESE DRAWINGS ARE THE PROPERTY OF CONTROL TECHNIQUES plc. THEY MUST NOT BE COPIED IN ANYWAY, NOR USED BY OR COMMUNICATED TO THIRD PARTIES, WITHOUT OUR WRITTEN CONSENT.